LS100 Series Dexterous type AC Drive User Manual

A00
Data Code: 190531009

Contents

Safety Information and Precautions 2

1 Product Information 4

1.1 Nameplate and Designation Rule 4

1.2 General Specifications 5

1.3 Technical Specifications 7

1.4 Environment 8

1.5 EMC Filter 8

1.5.1 Internal Filter 8

1.5.2 External Filter 8

1.6 Reactor 9

1.6.1 Input AC Reactor 9

1.6.2 Output Reactor 9

2 Mechanical Installation and Wiring 11

2.1 Mechanical Installation 11

2.1.1 Installation Environment 11

2.1.2 Cabinet Layout 12

2.1.3 Installation Method 13

2.2 Wiring 14

2.2.1 Typical System Connection 14

2.2.2 Terminal Description 15

2.2.3 Remove the EMC and VDR Screws 17

3 Operating Panel 18

3.1 Get Familiar with Operating Panel 18

4 Quick Setup 21

4.1 Setup Flowchart 21

5 Parameter Table 27

5.1 Introduction 27

5.2 Standard Parameters 27

5.3 Monitoring Parameter 50

6 Troubleshooting 52

6.1 AC Drive Performance Fine Tuning 52

6.2 Fault Codes and Troubleshooting 53

6.3 Symptoms and Diagnostics 55

Revision History 57

Safety Information and Precautions

This guide is packaged together with the product for LS100 AC Drive. It contains basic information for quick start of the drive. For safety and more information, please refer to the LS100 AC Drive User Manual, which can be downloaded on website: https://www.lensail.com.

■ Electrical Safety

Extreme care must be taken at all times when working with the AC Drive or within the area of the AC Drive. The voltages used in the AC Drive can cause severe electrical shock or burns and is potentially lethal. Only authorized and qualified personnel should be allowed to work on AC Drives.

■ Machine/System Design and Safety of Personnel

Machine/system design, installation, commissioning startups and maintenance must be carried out by personnel who have the necessary training and experience. They must read this safety information and the contents of this manual. If incorrectly installed, the AC Drive may present a safety hazard.

The AC Drive uses high voltages and currents (including DC), carries a high level of stored electrical energy in the DC bus capacitors even after power OFF. These high voltages are potentially lethal.

The AC Drive is NOT intended to be used for safety related applications/functions. The electronic “STOP &START” control circuits within the AC Drive must not be relied upon for the safety of personnel. Such control circuits do not isolate mains power voltages from the output of the AC Drive. The mains power supply must be disconnected by an electrical safety isolation device before accessing the internal parts of the AC Drive.

Safety risk assessments of the machine or process system which uses an AC Drive must be undertaken by the user and or by their systems integrator/designer. In particular the safety assessment/design must take into consideration the consequences of the AC Drive failing or tripping out during normal operation and whether this leads to a safe stop position without damaging machine, adjacent equipment and machine operators/users. This responsibility lies with the user or their machine/process system integrator.

The system integrator/designer must ensure the complete system is safe and designed according to the relevant safety standards. Lensail Technology and Authorized Distributors can provide recommendations related to the AC drive to ensure long term safe operation.

■ Electrical Installation - Safety

Electrical shock risk is always present within an AC Drive including the output cable leading to the motor terminals. Where dynamic brake resistors are fitted external to the AC Drive, care must be taken with regards to live contact with the brake resistors, terminals which are at high DC voltage and potentially lethal. Cables from the AC Drive to the dynamic brake resistors should be double insulated as DC voltages are typically 300 VDC to 800 VDC.

Mains power supply isolation switch should be fitted to the AC Drive. The mains power supply must be disconnected via the isolation switch before any cover of the AC Drive can be removed or before any servicing work is undertaken stored charge in the DC bus capacitors of the PWM AC Drive is potentially lethal after the AC supply has been disconnected. The AC supply must be isolated at least 10 minutes before any work can be undertaken as the stored charge will have been discharged through the internal bleed resistor fitted across the DC bus capacitors.

Whenever possible, it is good practice to check the DC bus voltage with a VDC meter before accessing the AC Drive bridge. Where the AC Drive input is connected to the mains supply with a plug and socket, then upon disconnecting the plug and socket, be aware that the plug pins may be exposed and internally connected to the DC bus capacitors (via the internal bridge rectifier in reversed bias). Wait 10 minutes to allow stored charge in the DC bus capacitors to be dissipated by the bleed resistors before commencing work on the AC Drive.

■ Electrical Shock Hazard

Ensure the protective earthing conductor complies with technical standards and local safety regulations. Because the leakage current exceeds 3.5 mA in all models, IEC 61800-5-1 states that either the power supply must be automatically disconnected in case of discontinuity of the protective earthing conductor or a protective earthing conductor with across-section of at least 10 mm^2 (Cu) or 16 mm^2 (Al) must be used. Or use two PE cables and each cable must satisfy the IEC requirements independently. Failure to comply may result in death or serious injury.

When using an earth leakage circuit breaker, use a residual current operated protective device (RCD) of type B (breaker which can detect both AC and DC). Leakage current can cause unprotected components to operate incorrectly. If this is a problem, lower the carrier frequency, replace the components in question with parts protected against harmonic current, or increase the sensitivity amperage of the leakage breaker to at least 100 mA per drive.

Factors in determining leakage current:

- Size of the AC drive
- AC drive carrier frequency
- Motor cable type and length
- EMI/RFI filter

■ Approvals

Certification marks on the product nameplate indicate compliance with the corresponding certificates and standards.

Certification	Mark	Directives		Standard
CE	CE	EMC directives	2014/30/EU	EN 55032:2015, EN 55035:2017, EN 61000-3-2:2014 EN 61000-3-3:2013
		LVD directives	2014/35/EU	EN 61800-5-1

Note	• The above EMC directives are complied with only when the EMC electric installation requirements are strictly observed. • Machines and devices used in combination with this drive must also be CE certified and marked. The integrator who integrates the drive with the CE mark into other devices has the responsibility of ensuring compliance with CE standards and verifying that conditions meet European standards. • The installer of the drive is responsible for complying with all relevant regulations for wiring, circuit fuse protection, earthing, accident prevention and electromagnetic (EMC regulations). In particular fault discrimination for preventing fire risk and solid earthing practices must be adhered to for electrical safety (also for good EMC practice). • For more information on certification, consult our distributor or sales representative.

■ Motor Thermal Protection

Motor thermal protection is not assessed by UL.

1 Product Information

1.1 Nameplate and Designation Rule

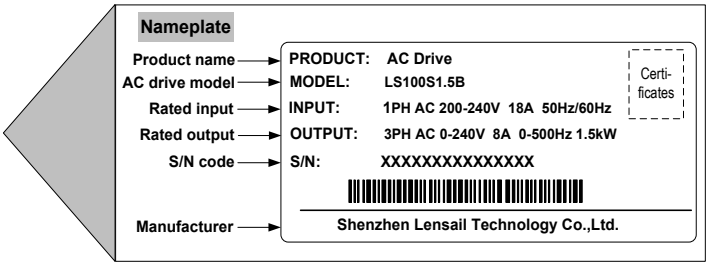

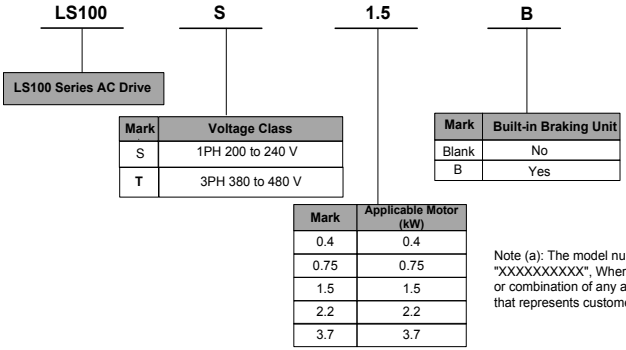

Mark	Voltage Class
S	1PH 200 to 240 V
T	3PH 380 to 480 V

Mark	Built-in Braking Unit
Blank	No
B	Yes

Mark	Applicable Motor (kW)
0.4	0.4
0.75	0.75
1.5	1.5
2.2	2.2
3.7	3.7

Note (a): The model number may include a suffix "XXXXXXXXXX", Where "XXXXXXXXXX" can be blank or combination of any alphanumeric and/or symbols that represents customer identity.

1.2 General Specifications

Voltage class			200 VAC to 240 VAC			
Model: LS100SxxB			0.4	0.75	1.5	2.2
Dimension(2)	Height, Width, Depth		[H]: 180 mm, [W]: 75 mm, [D]: 145 mm			
Mounting Hole, [mm]			Φ5.0			
Drive Input	Rated Input voltage		1 PH, 200 VAC to 240 VAC , -15% to +10%			
	Rated input current, [A]		6.5	11.0	18.0	27.0
	Rated input frequency		50/60 Hz, ±5%			
	Power capacity, [kVA]		1.7	3.0	4.8	7.1
Drive Output	Applicable motor	[kW]	0.4	0.75	1.5	2.2
		[HP]	0.5	1	2	3
	Output current, [A]		2.6	4.6	8.0	11.0
	Default carrier frequency, [kHz]		6	6	6	6
	Overload capacity		150% for 60 Sec			
	Max. output voltage		3 PH, 0 to 240 VAC			
	Max. output frequency		50 to 500 Hz			
Braking Resistor	Recommended power, [W]		80	80	100	100
	Recommended resistance, min. [Ω]		200	150	100	70
Weight, [kg]			1.1			

Voltage class			380 VAC to 480 VAC				
Model: LS100TxxB			0.4	0.75	1.5	2.2	3.7
Dimension(2)	Height, Width, Depth		[H] : 180 mm, [W] : 75 mm, [D] : 145 mm				
Mounting Hole [mm]			Φ5.0				
Drive Input	Rated Input Voltage		3 PH 380 to 480 VAC, -15% to +10%				
	Rated Input Current, [A]		2.6	4.5	5.5	6.5	11.0
	Rated input frequency		50/60 Hz, ±5%				
	Power Capacity, [kVA]		1.0	1.5	3.0	4.0	5.9
Drive Output	Applicable Motor	[kW]	0.4	0.75	1.5	2.2	3.7
		[HP]	0.5	1	2	3	5
	Output Current, [A]		1.8	3.4	4.8	5.5	9.5
	Default carrier Frequency, [kHz]		6	6	6	6	4
	Overload Capacity		150% for 60 Sec				
	Max. output voltage		3 PH, 0 to 480 VAC				
	Max. output frequency		50 to 500 Hz				
Braking Resistor	Recommended Power, [W]		150	150	250	300	400
	Recommended Resistance, min. [Ω]		300	300	220	200	130
Mass, [kg]			1.1				

Note

(1): "B" denotes build-in brake function.

(2): The dimensions are shown as below:

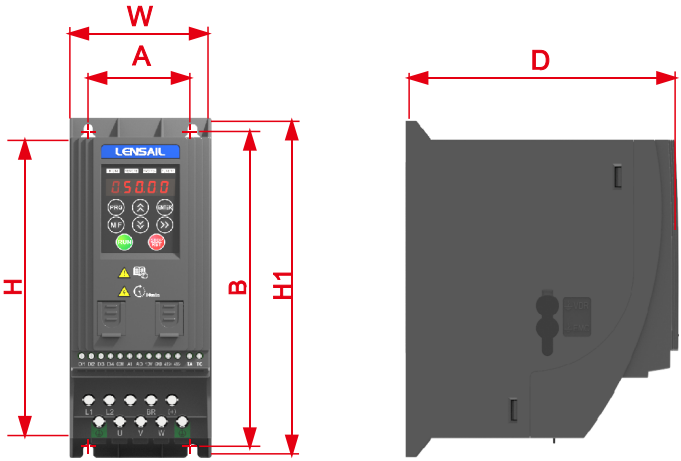

1.3 Technical Specifications

Items		Specification
Common functions	Highest frequency	V/F control: 0 to 500 Hz, SVC control: 0 to 500 Hz (only for three-phase models)
	Carrier frequency	0.8 kHz to 12 kHz, and able to automatically adjust carrier frequency based on load characteriestics
	Input frequency resolution	Digital settings: 0.01 Hz; analog setting: highest frequency x 0.025%
	Control mode	V/F control
	Oerload capacity	150% rated current 60s, 180% rated current 2S
	Torque lifting	Automatic torque lifting, manual torque lifting, 0.1%~30.0%
	V/F curve	Two ways: linear type; multi-point type
	Acceleration and deceleration curve	Linear acceleration and deceleration mode, dynamic S curve. 2 types of acceleration and deceleration time, acceleration and deceleration time range 0.0~6500.0s
	DC braking	DC braking frequency: 0.00 Hz to 10 Hz Braking time: 0.0s~100.0 s current value for braking action:0% to 100%
	Jogging control	Jogging frequency range: 0.00 Hz to 50.00 Hz Jogging and acceleration time 0.0s~6500.0s
	Multiple speed section operation	Achieve a maximun of 8 speed sections operation via control terminal
	Buid-in PID	Able to achieve a closed loop control system of process control
	Automatic voltage regulation (AVR)	Automatically maintains constant output voltage when voltage changes in the power grid
	Overvoltage and overcurrent stall control	Automatically limit the current and voltage during operation to prevent frequent over flow and voltage tripping
	Fast current limiting function	Minimize overcurrent faults and protect drive normal operation
	Instantaneous stop prevention	Use load feedback power to compensate for the reduction of voltage in case of instantaneous power cut, and maintain the drive running in a short time, the RUN indicator on the panel shall flash
	Fast current limiting	Minimize overcurrent faults of drive unit
	Timing control	Timing control function: set time range to 0.0 min ~ 6500.0 min
	Communicaiton bus	Support field bus: RS485, CANlink (can be customized)
Operation	Command source	Operating panel, control terminal, serial communication port, and can be switched in many ways
	Frequency source	5 frequency sources: Digital, analog voltage, analog current, pulse (DI4), serial port, and can be switched in many ways
	Auxiliary frequency sources	5 auxiliary frequency sources can flexibly realize auxiliary frequency trimming and frequency synthesis
	Input terminals	4 digital input terminals, 1 support the highest 20 kHz high speed pulse input; 1 analog input terminals, support 0 ~ 10V/0 ~ 20mA input/output terminal
	Output terminals	1 relay output terminals, one analog output terminals, support 0 ~ 10V voltage output
	Input/output terminal	1 input/output terminal DIO, support selecting DI and DO function via DIP switch, details, see figure 2-2, DO common terminal is COM
	Communication terminals	1 line 485, communication, CANlink communication (can be customized)
Display & keyboard operation(format)	LED display	Display and Keyboard operation
	Keyboard lock and function selection	Achieve keyboard partial or full lock, define the function of some keys to prevent misoperation
	Protection function	Short circuit detection of electric motor, input and output phase loss protection, over-current protection, over-voltage protection, undervoltage protection, overheating protection, overload protection

1.4 Environment

Environment conditions	Indoor, keep away from direct sunlight, no dust, corrosive gas, flammable gas, oil mist, water vapor, water or salt, for instance.
Altitude	Use below 1000 m. The drive power derates 1% at every 100 m altitude increase. The highest allowed attitude is 3000 m.
Storage Temperature	-20°C to +60°C
Operating Temperature	-10°C to +50°C. When the temperature is between 40°C to 50°C, the drive current derates 1.5% at every 1°C increase. The highest allowed working temperature is 50°C.
Max. Humidity	≤ 95% RH, no-condensing
Vibration	≤ 5.9 g/s^2 (0.6 g)
Pollution Degree	PD2
Over-Voltage Category	OVC III
Power Supply System	TT/TN
	IT (Remove the screws of VDR and EMC filter according to section 2.3.)
Enclosure	IP20

1.5 EMC Filter

1.5.1 Internal Filter

Single-phase model standard built-in filter, able to meet the EN61800-3 C3 transmission requirement of CE certification. C3 filter is built in the drive.

1.5.2 External Filter

- Single-phase model standard built-in filter, able to meet the EN61800-3 C2 transmission requirement of CE certification.

Note	• Keep the connection cable between the filter and the drive as short as possible (shorter than 30 cm). • Garantee that the filter and the drive are connected to the same grounding surface. • The grounding of the filter output terminal should be connected to the input ground terminal of the drive. • The filter must be reliably grounded, failiure to comply may result in filter malfunction.

Drive mode	Power capacity kVA	Input current A
Single-phase power: 200 V to 240 V, 50/60Hz range: -15% to 10%		
LS100S0.4B	1.7	6.5
LS100S0.75B	3.0	11.0
LS100S1.5B	4.8	18.0
LS100S2.2B	7.1	27.0

- Three-phase model optional external filter, able to meet the EN61800-5 C3 transmission requirement of CE certification.

Note	• Keep the connection cable between the filter and the drive as short as possible (shorter than 30 cm). • Grantee that the filter and the drive are connected to the same grounding surface. • The grounding of the filter output terminal should be connected to the input ground terminal of the drive. • The filter must be reliably grounded, failure to comply may result in filter malfunction.

Drive mode	Power capacity kVA	Input current A
Three-phase power: 380 V to 480 V, 50/60 Hz range: -15% to 10%		
LS100T0.4B	1.0	2.6
LS100T0.75B	1.5	4.5
LS100T1.5B	3.0	5.5
LS100T2.2B	4.0	6.5
LS100T3.7B	5.9	11.0

1.6 Reactor

1.6.1 Input AC Reactor

For LS100 series drive with power greater than 1kW, an AC reactor should be connected at the input terminal to reduce the current harmonics.

The sensitivity of a single-phase AC reactor shall be greater than 8 mH to meet the IEC 61000-3-12 standard.

The sensitivity of a three-phase AC reactor shall be greater than 5 mH to meet the IEC 61000-3-12 standard .

1.6.2 Output Reactor

When the motor output cable is longer than 10 meters, the rising edge of pulse wave generates a reflected voltage at motor terminals due to the mismatch of characteristic impedance of the motor and cable. The reflected voltage is imposed on the high voltage square wave pulse, bringing impact for stator winding insulation, which causes sustained impact of greater heat loss and more partial discharge pulse due to high frequency harmonics, resulting in a rapid failure of motor insulation in PWM under pulse voltage.

Therefore, when the motor output cable is longer than 10 meters, install a reactor at the output terminal.

1) Recommended reactor model

Drive mode	Power capacity kVA	Output current A	Recommend output reactor model (SCHAFFNER)	Output reactor inductance mH	Motor cable length after installation of reactor m
Single-phase power: 200 V to 240 V, 50/60Hz range: -15% to 10%					
LS100S0.4B	1.7	2.6	RWK 305-4-KL	1.47	150
LS100S0.75B	3.0	4.6	RWK 305-7.8-KL	0.754	150
LS100S1.5B	4.8	8.0	RWK 305-10-KL	0.588	150
LS100S2.2B	7.1	11.0	RWK 305-14-KL	0.42	150
Three-phase power: 380 V to 480 V, 50/60 Hz range: -15% to 10%					
LS100T0.4B	1.0	1.8	RWK 305-7.8-KL	0.754	150
LS100T0.75B	1.5	3.4	RWK 305-7.8-KL	0.754	150
LS100T1.5B	3.0	4.8	RWK 305-7.8-KL	0.754	150
LS100T2.2B	4.0	5.5	RWK 305-7.8-KL	0.754	150
LS100T3.7B	5.9	9.5	RWK 305-14-KL	0.42	150

2) Dimensions of the output reactor model：

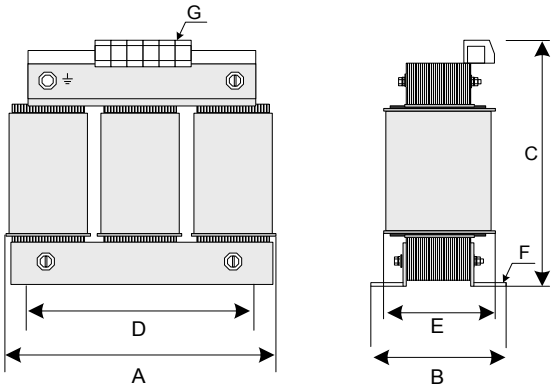

Drive mode	A	B	C	D	E	F	G
RWK 305-4-KL	100	max.60	max.115	56	34	4.8×9	2.5 mm^2
RWK 305-7.8-KL	100	max.60	max.115	56	34	4.8×9	2.5 mm^2
RWK 305-10-KL	100	max.70	max.115	56	43	4.8×9	2.5 mm^2
RWK 305-14-KL	125	max.70	max.135	100	45	5×8	2.5mm^2

2 Mechanical Installation and Wiring

2.1 Mechanical Installation

The AC drive must be installed in a nonconbustible cabinet that provides effective electrical and mechanical protection for CE requirements. Installation must conform to local and regional laws and regulations, and to relevant IEC requirements.

2.1.1 Installation Environment

Item	Requirements
Cooling and ventilation	Ensure the mounting location is: Install the AC drive on a backplate, and ensure there is sufficient space around the enclosure to allow for efficient heat dissipation.
Mounting location	Ensure the mounting location is: Away from direct sunlight In an area where humidity is 95% RH or less with no condensation Protected against corrosive, combustible or explosive gases and vapours Free from oil, dirt, dust or metallic powders.
Vibration	Ensure the mounting location is not affected by levels of vibration that exceeds 0.6 g. Avoid installing the enclosure near punching machines or other mechanical machinery that generates high levels of vibration or mechanical shock.
Protective enclosure	The AC drive must be installed in a nonconbustible cabinet that provides effective electrical and mechanical protection for CE requirements. Installation must conform to local and regional laws and regulations, and to relevant IEC requirements.

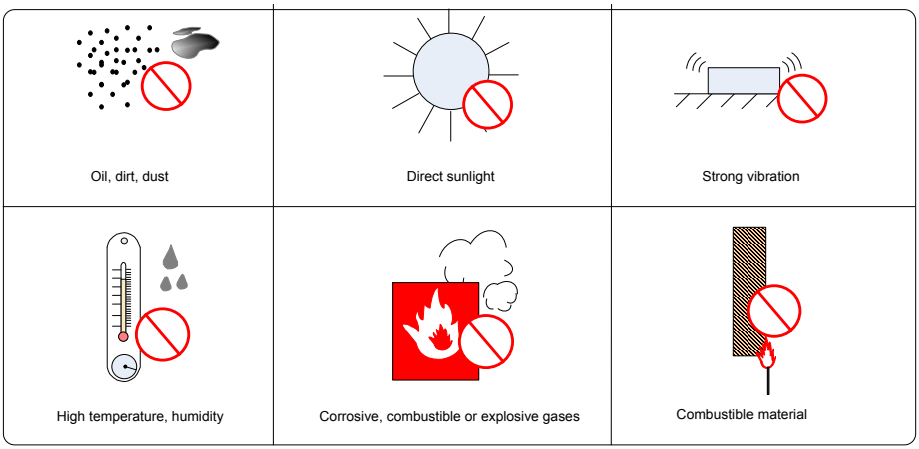

2.1.2 Cabinet Layout

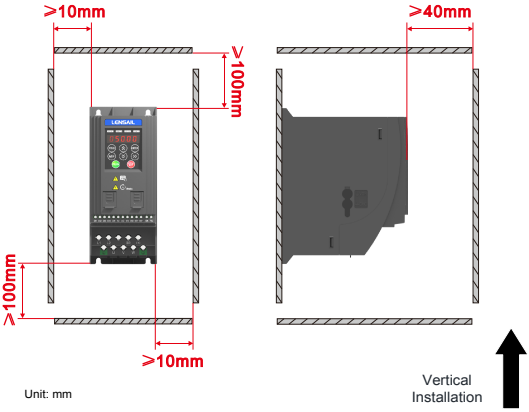

Installing a single drive

Installing drive side by side

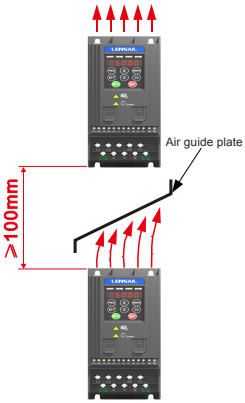

Unit: mm

Installing one drive above another

2.1.3 Installation Method

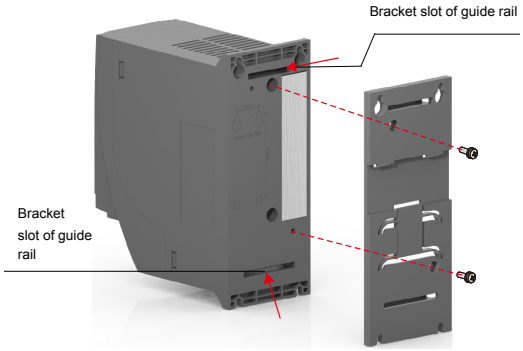

Tightening screw

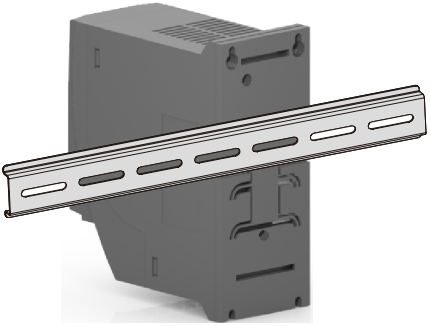

Installing guide rail

Note	Tighten all screws based on the specified tightening torque.

2.2 Wiring

2.2.1 Typical System Connection

■ LS100XXX terminal wiring diagram

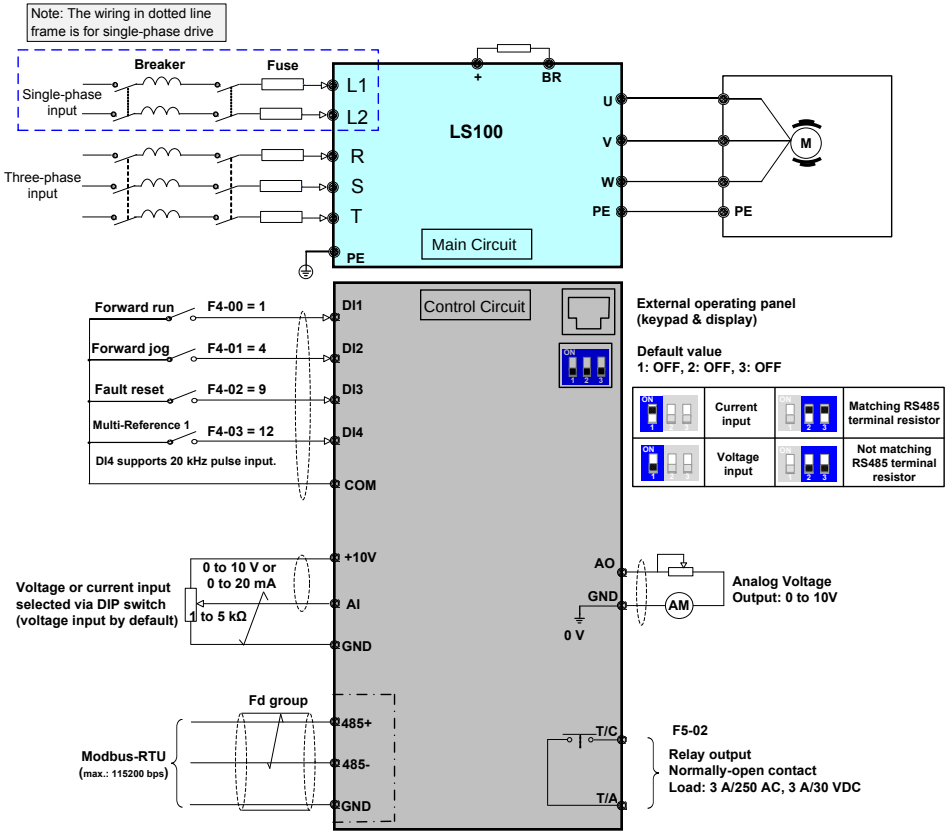

Figure 2-1 Single/Three-phase input terminal wiring(LS100S0.4B to LS100S2.2B, LS100T0.4B to LS100T3.7B)

Note	For the DI terminals, low level is valid and valid level is < 5 V, input resistance is 3.6 K, DI1 to DI3 satisfies 100 Hz frequency input, and DI4 satisfies 20 kHz frequency input. The requirement of pulse duty cycle is 30% to 70%.

2.2.2 Terminal Description

■ Terminals of Main Circuit

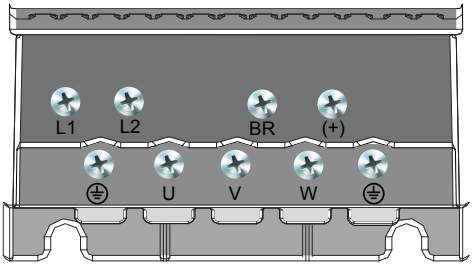

Terminal	Terminal Name	Description
L1, L2	Single-phase supply input	Connect to the single-phase AC power supply.
BR, (+)	Braking resistor connection	Connected to external braking resistor.
U, V, W	Output terminals	Connect to a three-phase motor.
⏚	Ground (PE)	Grounding connection.

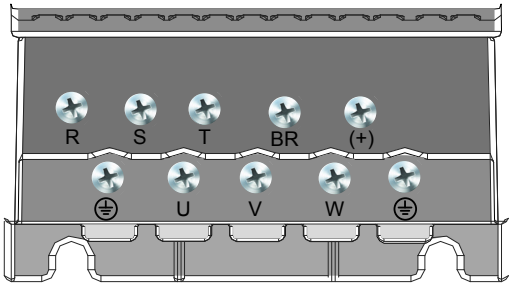

Terminal	Terminal Name	Description
R, S, T	Three-phase supply input	Connect to the three-phase AC power supply.
BR, (+)	Braking resistor connection	Connected to external braking resistor.
U, V, W	Output terminals	Connect to a three-phase motor.
⏚	Ground (PE)	Grounding connection.

■ LS100XXX Main Control Board Terminals

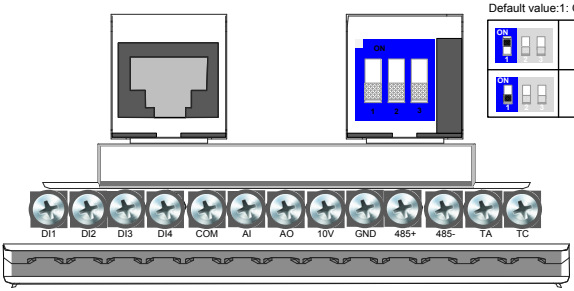

DIP switch
Default value:1: OFF, 2: OFF, 3: OFF

ON 1	Current input	ON 2 3	Matching RS485 terminal resistor
ON 1	Voltage input	ON 2 3	Not matching RS485 terminal resistor

Terminal Mark	Terminal Name	Function	
DI1-DI4	Digital input	Multi-functional input terminal	Low effective, valid level < 5 V, DI-DI3 is low speed DI, frequency < 100 HZ, DI4 is high speed pulse input, highest can support 20 kHz frequency
COM	24 V grounded power supply	24 V grounded power supply	Internal isolation from COM
+10 V	Analog input/output	10 V analog voltage output	10V ± 10%, up to 10 mA
GND		Analog ground	Internal isolation from COM
AI		Analog input signal channel 1 at one end	(0 to 10V) / (0 to 20 mA) input, 12 bit resolution, with calibrated accuracy of 0.5%, the response time is less than 8 ms
AO		Analog output 1	AO: 0 to 10 V, with calibrated accuracy of 100 mV, 10 bit resolution, with the calibrated accuracy of 1%
T/A-T/C	Relay output	Relay output	TA-TC: Normally open; Load: 3 A/250 VAC 3 A/30 VDC
GND	Communication	Common ground with 10 V	
485+		RS485 positive communication signal	Half duplex RS485 communication, with the highest baud rate of 115200, can support up to 64 nodes Note: 485 communication function can only be used on LS100XXX model
485-		RS485 negative communication signal	

2.2.3 Remove the EMC and VDR Screws

WARNING

To prevent personnel injury or damage to the equipment, you must ensure mains power is off before you start.

If the drive is applied in an IT system, remove the EMC and VDR screws as shown in the following figures.

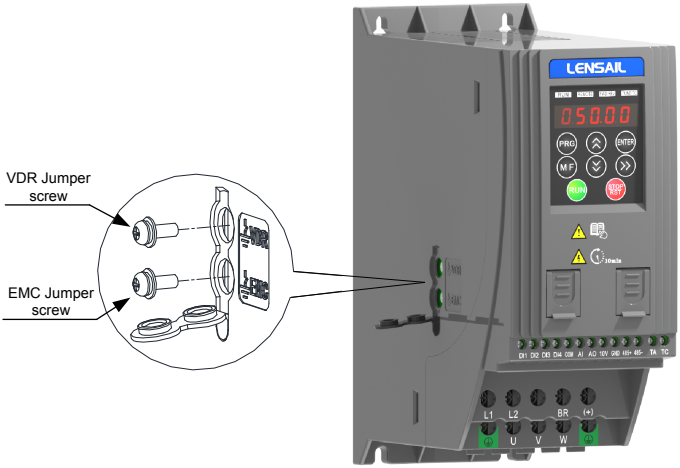

3 Operating Panel

3.1 Get Familiar with Operating Panel

■ Overview

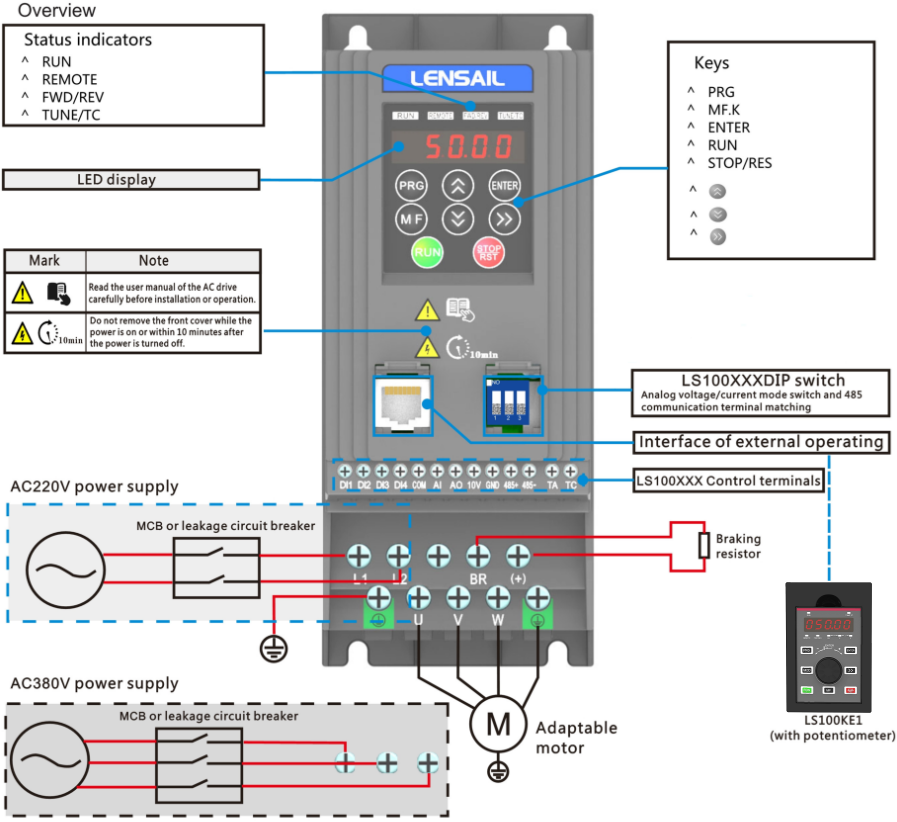

Note: The wirings in dotted line frames are for both three-phase and single-phase drive,you may perform wiring based on the model you receive.

■ Keys on operation panel

Key	Key Name	Function
PRG	Programming	Enter or exit Level I menu. Return to the previous menu.
ENTER	Confirm	Enter each level of menu interface. Confirm displayed parameter setting.
⌃	Increment	When navigating a menu, it moves the selection up through the screens available. When editing a parameter value, it increases the displayed value. When the AC drive is in RUN mode, it increases the speed.
⌄	Decrement	When navigating a menu, it moves the selection down through the screens available. When editing a parameter value, it decreases the displayed value. When the AC drive is in RUNNING mode, it decreases the speed.
»	Shift	Select the displayed parameter in the STOP or RUNNING status. Select the digit to be modified when modifying a parameter value

Key	Key Name	Function
RUN	RUN	Start the AC drive when using the operating panel control mode. It is inactive when using the terminal or communication control mode.
STOP RST	Stop/Reset	Stop the AC drive when the drive is in the RUNNING status. Perform a reset operation when the drive is in the FAULT status. Note: The functions of this key can be restricted by using function F7-02.
M F	Multifunction	Perform a function switchover as defined by the setting of F7-01, for example to quickly switch command source or direction.

■ Status Indicators

There are four red LED status indicators at the top of the operating panel.

Indicator	Indication
RUN	ON indicates the RUNNING status.
	FLASHING indicates power dip ride-through.
	OFF indicates the STOP status.
REMOTE	ON indicates under terminal control.
	FLASHING indicates under remote control.
	OFF indicates under operating panel control.
FWD/REV	ON indicates reverse motor rotation.
	OFF indicates forward motor rotation.
TUNE/TC	FLASHING indicates a fault condition on AC drive.
	OFF indicates a normal condition on AC drive.

■ Operations of Parameters

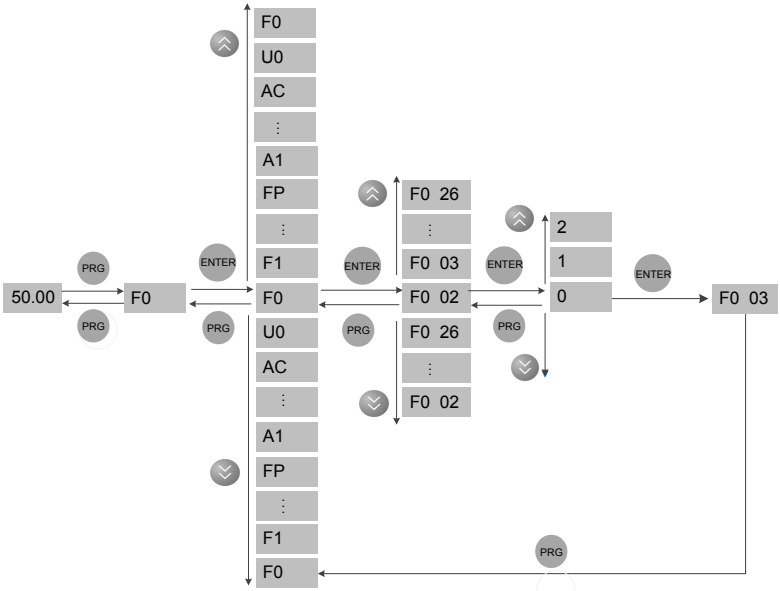

■ Parameter Arrangement

Parameter Group	Description	Remark
F0 to FF	Standard parameter group	Standard function parameters
A1 to AE	Advanced parameter group	AI/AO correction
U0	RUNNING status parameter group	Display of basic parameters

4 Quick Setup

4.1 Setup Flowchart

START	Para.	Parameter Name	Default	Commission
Before power on				
Install and cable the drive		Install and cable the drive as explained in chapters 1 to 3 of the LS100 AC Drives User Manual.		
Check wirings of power supply and AC drive outputs		-		
Restore parameters	FP-01	Parameter initialization	0	
		0: No operation 01: Restore default settings except motor parameters 02: Clear records including errors 03: Reserved 04: Back up parameters 05 to 19: Reserved 20: Mechanical movement industry (conveying belt) 21: Inertia industry (fan) 22 to 500: Reserved 501: Restore user's backup parameters NOTE: It is recommended to "Restore default settings" prior to commissioning the AC drive.		
CONTINUE	Para.	Parameter Name	Default	Commission

START	Para.	Parameter Name	Default	Commission
Set motor parameters		Motor Nameplate		
		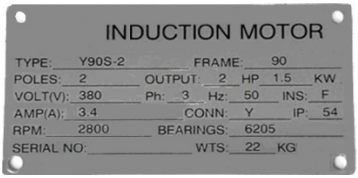		
	F1-01	Rated motor power	model dependent	1.5
		Unit: kW		
	F1-02	Rated motor voltage	model dependent	380
		Unit: V		
	F1-03	Rated motor current	model dependent	3.4
		Unit: A		
	F1-04	Rated motor frequency	model dependent	50
		Unit: Hz		
	F1-05	Rated motor speed	model dependent	2800
		Unit: rpm.		
Perform motor auto-tuning	F1-37	Auto-tuning selection	0	1
		1: Static auto-tuning Steps of auto-tuning: 1. Ensure the UVW connection between AC drive and motor is not cut off by output contactor; if it is cut off, then manually handle with the output contactor. 2. Set F0-02 = 0 (operating panel), so that the key RUN can start the tuning procedure. 3. Set F1-37 = 1, press ENTER, then LED on panel will display letters "TUNE". 4. Press the key RUN on panel, then motor starts auto-tuning, it usually takes about 30 seconds to finish this auto-tuning, wait until LED stops displaying "TUNE"		
Select command source.	F0-02	Command source selection	1	
		0: Operating panel (keypad & display) 1: Terminal I/O control 2: Serial comms.		
Select frequency reference setting channel	F0-03	Main frequency reference setting channel selection	0	
		0: Digital setting F0-08 (pressing ⌃ or ⌄ can revise F0-08 easily, and the revised value won't be cleared even after power off) 1: Digital setting F0-08 (pressing ⌃ or ⌄ can change F0-08 easily, but the revised value would be cleared after power off) 2: AI 5: Pulse setting (DI4) 6: Multi-reference setting 7: Simple PLC 8: PID 9: Communication setting		
CONTINUE	Para.	Parameter Name	Default	Commission

CONTINUE	Para.	Parameter Name	Default	Commission
If F0-08 is frequency reference				
Set F0-08	F0-08	Preset frequency	50.00	
		0 Hz to F0-10		
If AI is fequency reference				
Set AI	F4-13	AI curve minimum input	0.00	
		0 V to F4-15;		
	F4-14	Corresponding percentage of AI minimum input	0.0	
		-100.0% to 100.0%		
If multi-reference is frequency reference	F4-15	AI maximum input	10.00	
		F4-13 to 10.00 V		
	F4-16	Corresponding percentage of AI maximum input	100.0	
		-100.0% to 100.0%		
Set multi-reference values	FC-00	Reference 0	0.0	
		0.0% to 100.0%		
	FC-01 to FC-07	Reference 1o reference 7	0.0	
If any digital input is used		0.0% to 100.0%		
Set DI function	F4-00	DI1 function selection	1	
		0: No function 1: Forward run (FWD) 2: Reverser run (REV) 3: Three-wire control 4: Forward jog (FJOG) 5: Reverse jog (RJOG) 6: Terminal UP 7: Terminal DOWN 8: Coast to stop 9: Fault reset (RESET) 10: RUN disabled 11: External fault normally-open input 12: Multi-reference terminal 1 13: Multi-reference terminal 2 14: Multi-reference terminal 3 15: Multi-reference terminal 4 16: Terminal 1 for acceleration/deceleration time selection 18: Frequency reference setting channel switchover 19: UP and DOWN setting clear (terminal, operation panel) 20: Command source switchover 21: Acceleration/Deceleration prohibited 22: PID disabled 23: PLC state reset		
CONTINUE	Para.	Parameter Name	Default	Commission

CONTINUE

Para.	Parameter Name	Default	Commission
F4-00	DI1 function selection	1	
	30: Pulse input as frequency reference (valid only for DI4) 32: Immediate DC injection braking 33: External fault normally-closed input 34: Frequency modification enabled 35: PID operation direction reverse 36: External stop 1 37: Command source switchover 2 38: PID integral disabled 39: Switchover between main frequency reference and preset frequency 40: Switchover between auxiliary frequency reference and preset frequency 43: PID parameter switchover 47: Emergency stop (ES) 48: External stop 2 49: Deceleration DC injection braking 50: Clear running time this time 51: Two-wire control/ Three-wire control 52: Reverse running prohibited		
F4-01	DI2 function selection	4	
	Setting range same as DI1.		
F4-02	DI3 function selection	9	
	Setting range same as DI1.		
F4-03	DI4 function selection	12	
	Setting range same as DI1.		
F5-02	Relay function selection(T/A-T/C)	0	
	0: No output 1: AC drive running 2: Fault output 3: Frequency level detection 1 output 4: Frequency reached 5: Zero-speed running (no output at stop) 6: Motor overload pending 7: AC drive overload pending 11: PLC cycle completed 12: Accumulative running time reached 13: Frequency limited 15: Ready for RUN 17: Frequency upper limit reached 18: Frequency lower limit reached (no output at stop) 19: Undervoltage 20: Communication setting 24: Accumulative power-on time reached 26: Frequency 1 reached 28: Current 1 reached 30: Timing reached		

If any digital output is used

Set DO function

CONTINUE

Para.	Parameter Name	Default	Commission

CONTINUE	Para.	Parameter Name	Default	Commission
Set DO function	F5-02	Relay function selection(T/A-T/C)	0	
		31: AI input exceeding limit 32: Load lost 33: Reverse running 34: Zero current 36: Output current exceeding limit 37: Frequency lower limit reached (having output at stop) 38: Alarm output 40: Current running time reached 41: Fault output		
If an analog output is used				
Set AO function	F5-07	AO function selection	0	
		0: Running frequency 1: Set frequency 2: Output current 3: Output torque 4: Output power 5: Output voltage 6: Pulse input (100% corresponding to 20 kHz) 7: AI 12: Communication setting 13: Motor rotational speed 14: Output current (100% corresponding to 100 A) 15: Output voltage (100% corresponding to 1000 V)		
Set accel. /decel. time	F0-17	Acceleration time 1	Model dependent	
		0.0 to 6500.0s		
If smooth accel./decel. is requested	F0-18	Deceleration time 1	Model dependent	
		0.0 to 6500.0s		
Set S-curve	F6-07	Acceleration/Deceleration mode	0	
		0: Linear acceleration/deceleration 1: Static S-curve acceleration/deceleration 2: Dynamic S-curve acceleration/deceleration		
	F6-08	Time proportion of S-curve at Accel. start	30.0	
		0.0% to (100.0% - F6-09)		
	F6-09	Time proportion of S-curve at Accel. end	30.0	
		0.0% to (100.0% - F6-08)		
CONTINUE	Para.	Parameter Name	Default	Commission

CONTINUE	Para.	Parameter Name	Default	Commission
Set VF parameters	F3-00	V/F curve selection	0	
		0: Linear V/F 1: Multi-point V/F		
	F3-01	Torque boost	0.0	
		0.0 to 30.0 %; NOTE: if it is 0, then auto torque boost is activated, and it is recommended to use auto torque boost.		
	F3-02	Frequency limit of torque boost	50.00	
		0.00 Hz to maximum output frequency		
	F3-03	Multi-point V/F frequency 1	0.00	
		0.00 Hz to F3-05		
	F3-04	Multi-point V/F voltage 1	0.0	
		0.0 to 100.0 V		
	F3-05	Multi-point V/F frequency 2	0.00	
		F3-03 to F3-07, Hz		
	F3-06	Multi-point V/F voltage 2	0.0	
		0.0 to 100.0 V		
	F3-07	Multi-point V/F frequency 3	0.00	
		F3-05 to rated motor frequency F1-04, Hz		
	F3-08	Multi-point V/F voltage 3	0.0	
		0.0 to 100.0 V		
Trial RUN		Use operating panel, or digital input terminal, or serial communication control, to start AC drive, check if the running performance satisfies your application. If yes, then go forward to next step, if NO, then go back to check.		
Finish				

5 Parameter Table

5.1 Introduction

Groups F and A include standard function parameters. Group U includes the monitoring function parameters and extension card communication parameters.

5.2 Standard Parameters

Para. No.	Para. Name	Setting Range	Default	Comms. Address
Group F0: Standard Parameters				
F0-01	Motor 1 control mode	1: Feedback vector control (FVC) 2: V/F control	2	0xF001/0x0001
F0-02	Command source selection	0: Operating panel 1: Terminal I/O control 2: Serial comms.	0	0xF002/0x0002
F0-03	Main frequency reference setting channel selection	0: Digital setting (non-retentive at power down) 1: Digital setting (retentive at power down) 2: AI 5: Pulse reference(DI4) 6: Multi-reference 7: Simple PLC 8: PID reference 9: Serial comms.	0	0xF003/0x0003
F0-04	Auxiliary frequency reference setting channel selection	Same with F0-03	0	0xF004/0x0004
F0-05	Base value of range of auxiliary frequency reference for main and auxiliary calculation	0: Relative to maximum frequency 1: Relative to main frequency reference	0	0xF005/0x0005
F0-06	Range of auxiliary frequency reference for main and auxiliary calculation	0% to 150%	100%	0xF006/0x0006
F0-07	Final Frequency reference setting selection	00 to 34	00	0xF007/0x0007
F0-08	Preset frequency	0.00 to max. frequency (F0-10)	50.00 Hz	0xF008/0x0008
F0-09	Running direction	0: Run in the default direction 1: Run in the direction reverse to the default direction	0	0xF009/0x0009
F0-10	Max. frequency	50.00 to 500.00 Hz	50.00 Hz	0xF00A/0x000A
F0-11	Setting channel of frequency upper limit	0: Set by F0-12 1: AI 2: External operating panel 4: Pulse reference (DI4) 5: Communication reference	0	0xF00B/0x000B
F0-12	Frequency reference upper limit	F0-14 to F0-10	50.00 Hz	0xF00C/0x000C
F0-14	Frequency reference lower limit	0.00 Hz to frequency upper limit (F0-12)	0.00 Hz	0xF00E/0x000E
F0-15	Carrier frequency	0.8 to 12.0 kHz	Model dependent	0xF00F/0x000F
F0-16	Carrier frequency adjusted with temperature	0: Disabled 1: Enabled	1	0xF010/0x0010
F0-17	Acceleration time1	0.00 to 650.00s (F0-19=2) 0.0 to 6500.0s (F0-19=1) 0 to 65000s (F0-19=0)	Model dependent	0xF011/0x0011

Para. No.	Para. Name	Setting Range	Default	Comms. Address
F0-18	Deceleration time1	0.00 to 650.00s (F0-19=2) 0.0 to 6500.0s (F0-19=1) 0 to 65000s (F0-19=0)	Model dependent	0xF012/0x0012
F0-19	Acceleration/deceleration time unit	0: 1s 1: 0.1s 2: 0.01s	1	0xF012/0x0013
F0-23	Retentive of digital setting frequency upon stop	0: Not retentive 1: Retentive	0	0xF017/0x0017
F0-25	Acceleration/Deceleration time base frequency	0: Maximum frequency (F0-10) 1: Frequency reference 2: 100 Hz	0	0xF019/0x0019
F0-26	Base frequency for UP/DOWN modification during running	0: Running frequency 1: Frequency Reference	0	0xF01A/0x001A
Group F1: Motor 1 Parameters				
F1-01	Rated motor power	0.1 to 5.5 kW	Model dependent	0xF101/0x0101
F1-02	Rated motor voltage	1 to 600 V	Model dependent	0xF102/0x0102
F1-03	Rated motor current	0.01 to 30.00 A	Model dependent	0xF103/0x0103
F1-04	Rated motor frequency	0.01 Hz to max. frequency	Model dependent	0xF104/0x0104
F1-05	Rated motor speed	1 to 65535 rpm	Model dependent	0xF105/0x0105
F1-06	Asynchronous motor stator resistance	0.001 to 65.535 ohm	Auto-tuning dependent	0xF106/0x0106
F1-07	Asynchronous motor rotor resistance	0.001 to 65.535 ohm	Auto-tuning dependent	0xF107/0x0107
F1-08	Asynchronous motor leakage inductive reactance	0.001 to 65.535 mH	Auto-tuning dependent	0xF108/0x0108
F1-09	Asynchronous motor mutual inductive reactance	0.001 to 65.535 mH	Auto-tuning dependent	0xF109/0x0109
F1-10	Asynchronous motor no-load current	0.01A to F0-03	Auto-tuning dependent	0xF109/0x010A
F1-37	Motor auto-tuning method selection	0: No auto-tuning 1: Static auto-tuning 1 2: Complete auto-tuning	0	0xF125/0x0125
Group F2: Vector Control Parameters				
F2-00	Speed loop proportional gain 1	1 to 100	30	0xF200/0x0200
F2-01	Speed loop integral time 1	0.01 to 10.00s	0.50s	0xF201/0x0201
F2-02	Switchover frequency 1	0.00 to F2-05	5.00 Hz	0xF202/0x0202
F2-03	Speed loop proportional gain 2	1 to 100	20	0xF203/0x0203
F2-04	Speed loop integral time 2	0.01 to 10.00s	1.00s	0xF204/0x0204
F2-05	Switchover frequency 2	F2-02 to max. frequency	10.00 Hz	0xF205/0x0205
F2-06	SVC/FVC slip compensation gain	50% to 200%	100%	0xF206/0x0206
F2-07	SVC speed feedback filter time	0.000 to 0.100s	0.050s	0xF207/0x0207
F2-08	Vector control over-excitation gain	0 to 200	0	0xF208/0x0208

Para. No.	Para. Name	Setting Range	Default	Comms. Address
F2-09	Torque limit source in speed control	0: F2-10 1: AI 2: External operating panel 4: Pulse reference (DI5) 5: Serial comms. 6: Min. (AI1, AI2) 7: Max. (AI1, AI2)	0	0xF209/0x0209
F2-10	Digital setting of torque limit in speed control	0.0% to 200.0%	150.0%	0xF20A/0x020A
F2-11	Torque limit source in speed control (in regenerative state)	0: F2-10 1: AI 2: External operating panel 4: Pulse reference (DI5) 5: Communication reference 6: Min. (AI1, AI2) 7: Max. (AI1, AI2) 8: F2-12	0	0xF20B/0x020B
F2-12	Digital setting of torque limit in speed control (in regenerative state)	0.0% to 200.0%	150.0%	0xF20B/0x020B
F2-13	Excitation adjustment proportional gain	0 to 60000	10	0xF20D/0x020D
F2-14	Excitation adjustment integral gain	0 to 60000	10	0xF20E/0x020E
F2-15	Torque adjustment proportional gain	0 to 60000	10	0xF20F/0x020F
F2-16	Torque adjustment integral gain	0 to 60000	10	0xF210/0x0210
F2-17	Speed loop property	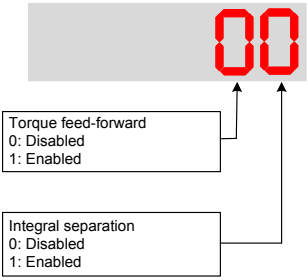	00	0xF211/0x0211
F2-18	Torque feed-forward gain	20 to 100	80	0xF212/0x0212
F2-19	Torque feed-forward filter time	10 to 200	50	0xF213/0x0213
F2-21	Max. torque coefficient of field weakening area	50% to 200%	80%	0xF215/0x0215
F2-22	Regenerative power limit	0.0%: no limit 0.1% to 200.0%	0.0%	0xF216/0x0216
Group F3: V/F Control Parameters				

Para. No.	Para. Name	Setting Range	Default	Comms. Address
F3-00	V/F curve setting	0: Linear V/F 1: Multi-point V/F 10: V/F complete separation 11: V/F half separation	0	0xF300/0x0300
F3-01	Torque boost	0.0%: automatic boost 0.1% to 30%	0.0%	0xF301/0x0301
F3-02	Cut-off frequency of torque boost	0.00 Hz to max. frequency	50.00 Hz	0xF302/0x0302
F3-03	Multi-point V/F frequency 1	0.00 Hz to F3-05	0.00 Hz	0xF303/0x0303
F3-04	Multi-point V/F voltage 1	0.0% to 100.0%	0.0%	0xF304/0x0304
F3-05	Multi-point V/F frequency 2	F3-03 to F3-07	0.00 Hz	0xF305/0x0305
F3-06	Multi-point V/F voltage 2	0.0% to 100.0%	0.0%	0xF306/0x0306
F3-07	Multi-point V/F frequency 3	F3-05 to rated motor frequency(F1-04)	0.00 Hz	0xF307/0x0307
F3-08	Multi-point V/F voltage 3	0.0% to 100.0%	0.0%	0xF308/0x0308
F3-09	Slip compensation gain	0.0% to 200.0%	0.0%	0xF309/0x0309
F3-10	V/F over-excitation gain	0 to 200	64	0xF30A/0x030A
F3-13	Voltage source for V/F separation	0: Set by F3-14 1: AI 2: External operating panel 4: Pulse reference (DI4) 5: Multi-reference 6: Simple PLC 7: PID reference 8: Serial comms. 100.0% corresponds to the rated motor voltage.	0	0xF30D/0x030D
F3-14	Digital setting of voltage for V/F separation	0 V to rated motor voltage	0 V	0xF30E/0x030E
F3-15	Voltage rise time of V/F separation	0.0 to 1000.0s	0.0s	0xF30F/0x030F
F3-16	Voltage decline time of V/F separation	0.0 to 1000.0s	0.0s	0xF310/0x0310
F3-17	Stop mode selection for V/F separation	0: Frequency and voltage declining to 0 independently 1: Frequency declining after voltage declines to 0	0	0xF311/0x0311
F3-18	Current limit level	50% to 200%	150%	0xF312/0x0312
F3-19	Current limit selection	0: Disabled 1: Enabled	1	0xF313/0x0313
F3-20	Current limit gain	0 to 100	20	0xF314/0x0314
F3-21	Compensation factor of speed multiplying current limit level	0 to 200%	50%	0xF315/0x0315

Para. No.	Para. Name	Setting Range	Default	Comms. Address
F3-22	Voltage limit	330.0 to 800.0 V	Single phase : 390.0 V Three phase: 760.0V	0xF316/0x0316
F3-23	Voltage limit selection	0: Disabled 1: Enabled	1	0xF318/0x0317
F3-24	Frequency gain for voltage limit	0 to 100	50	0xF318/0x0318
F3-25	Voltage gain for voltage limit	0 to 100	30	0xF319/0x0319
F3-26	Frequency rise threshold during voltage limit	0 to 50 Hz	5 Hz	0xF31A/0x031A
F3-27	Slip compensation time constant	0.1 to 10.0s	0.5	0xF31B/0x031B
Group F4: Input Terminals				
F4-00	DI1 function selection	0: No function 1: Forward run (FWD) 2: Reverser run (REV) 3: Three-wire control 4: Forward jog (FJOG) 5: Reverse jog (RJOG) 6: Terminal UP 7: Terminal DOWN 8: Coast to stop 9: Fault reset (RESET) 10: RUN disabled 11: External fault normally-open input 12: Multi-reference terminal 1 13: Multi-reference terminal 2 14: Multi-reference terminal 3 15: Multi-reference terminal 4 16: Terminal 1 for acceleration/deceleration time selection 18: Frequency reference setting channel switchover 19: UP and DOWN setting clear (terminal, operation panel) 20: Command source switchover 21: Acceleration/Deceleration prohibited 22: PID disabled 23: PLC state reset 30: Pulse input as frequency reference (On LS100XXX model, it is valid for DI4 terminal) (To be continued)	1	0xF400/0x0400
F4-01	DI2 function selection		4	0xF401/0x0401

Para. No.	Para. Name	Setting Range	Default	Comms. Address
F4-02	DI3 function selection	32: Immediate DC injection braking 33: External fault normally-closed input 34: Frequency modification enabled 35: PID operation direction reverse 36: External stop 1 37: Command source switchover 2 38: PID integral disabled 39: Switchover between main frequency reference and preset frequency 40: Switchover between auxiliary frequency reference and preset frequency 43: PID parameter switchover 47: Emergency stop (ES) 48: External stop 2 49: Deceleration DC injection braking 50: Clear running time this time 51: Two-wire control/ Three-wire control 52: Reverse running prohibited (End)	9	0xF402/0x0402
F4-03	DI4 function selection		12	0xF403/0x0403
F4-04	DIO terminal input function selection (only used on LS100XXX-NC model)			
F4-10	DI filter time	0.000s to 1.000s	0.010s	0xF40A/0x040A
F4-11	Terminal I/O control mode	0: Two-wire control mode 1 1: Two-wire control mode 2 2: Three-wire control mode 1 3: Three-wire control mode 2	0	0xF40B/0x040B
F4-12	Terminal UP/DOWN rate	0.001 to 65.535 Hz/s	1.000 Hz/s	0xF40C/0x040C
F4-13	AI curve1 min. input	0.00 V to F4-15	0.00 V	0xF40D/0x040D
F4-14	Corresponding percentage of AI curve 1 min. input	-100.00% to 100.0%	0.0%	0xF40E/0x040E
F4-15	AI curve 1 max. input	F4-13 to 10.00 V	10.00 V	0xF40F/0x040F
F4-16	Corresponding percentage of AIcurve1 max. input	-100.00% to 100.0%	100.0%	0xF410/0x0410
F4-17	AI1filtertime	0.00s to 10.00s	0.10s	0xF411/0x0411
F4-18	AI curve 2 min. input	0.00 V to F4-20	0.00 V	0xF412/0x0412
F4-19	Corresponding percentage of AI curve 2 min. input	-100.00% to 100.0%	0.0%	0xF413/0x0413
F4-20	AI curve 2 max. input	F4-18 to 10.00 V	10.00 V	0xF414/0x0414
F4-21	Corresponding percentage of AI curve 2 max. input	-100.00% to 100.0%	100.0%	0xF415/0x0415
F4-22	External operating panel potentiometer filter time	0.00 to 10.00s	0.10s	0xF416/0x0416
F4-28	Pulse min. input	0.00 kHz to F4-30	0.00 kHz	0xF41C/0x041C
F4-29	Corresponding percentage of pulse min. input	-100.00% to 100.0%	0.0%	0xF41D/0x041D
F4-30	Pulse max. input	F4-28 to 20.00 kHz	50.00 kHz	0xF41E/0x041E
F4-31	Corresponding percentage of pulse max. input	-100.00% to 100.0%	100.0%	0xF41F/0x041F
F4-32	Pulse filter time	0.00s to 10.00s	0.10s	0xF420/0x0420

Para. No.	Para. Name	Setting Range	Default	Comms. Address
F4-33	AI curve selection	00 External operating panel potentiometer curve selection 1: Curve 1 (two-point, see F4-13 to F4-16) 2: Curve 2 (two-point, see F4-18 to F4-21) AI curve selection 1: Curve 1 (two-point, see F4-13 to F4-16) 2: Curve 2 (two-point, see F4-18 to F4-21)	21	0xF421/0x0421
F4-34	Setting selection when AI less than min. input	00 Setting selection when external operating panel potentiometer less than min. input 0: Corresponding percentage of min. input 1: 0.0% Setting selection when AI less than min. input 0: Corresponding percentage of min. input 1: 0.0%	00	0xF422/0x0422
F4-35	DI1 delay	0.0 to 3600.0s	0.0s	0xF423/0x0423
F4-36	DI2 delay	0.0 to 3600.0s	0.0s	0xF424/0x0424
F4-37	DI3 delay	0.0 to 3600.0s	0.0s	0xF425/0x0425

Para. No.	Para. Name	Setting Range	Default	Comms. Address
F4-38	DI active mode selection1	0000 DI4 active mode: 0: High level active 1: Low level active DI3 active mode: 0: High level active 1: Low level active DI2 active mode: 0: High level active 1: Low level active DI1 active mode: 0: High level active 1: Low level active	00000	0xF426/0x0426
F4-41	DIO terminal type	0: DI/Pulse input 1: DO	0	0xF429/0x0429
Group F5: Output Terminals				
F5-02	Relay (T/A-T/C) function selection	0: No output 1: AC drive running 2: Fault output 3: Frequency level detection 1 output 4: Frequency reached 5: Zero-speed running (no output at stop) 6: Motor overload pending 7: AC drive overload pending 11: PLC cycle completed 12: Accumulative running time reached 13: Frequency limited 15: Ready for RUN 17: Frequency upper limit reached 18: Frequency lower limit reached (no output at stop) 19: Undervoltage 20: Communication setting 24: Accumulative power-on time reached 26: Frequency 1 reached 28: Current 1 reached 30: Timing reached 31: AI input exceeding limit 32: Load lost 33: Reverse running 34: Zero current 36: Output current exceeding limit 37: Frequency lower limit reached (having output at stop) 38: Alarm output 40: Current running time reached 41: Fault output	2	0xF502/0x0502
F5-04	DIO terminal output function selection (only used on LS100XXX-NC model)		0	0xF504/0x0504

Para. No.	Para. Name	Setting Range	Default	Comms. Address
F5-07	AO function selection	0: Running frequency 1: Frequency reference 2: Output current 3: Output torque 4: Output power 5: Output voltage 6: Pulse input 7: AI 8: External operating panel potentiometer 10: Length 11: Count value 12: Communication reference 13: Motor speed 14: Output current 15: Output voltage 16: Motor output torque (actual value)	0	0xF507/0x0507
F5-10	AO zero offset coefficient	-100.0% to 100.0%	0.0%	0xF50A/0x050A
F5-11	AO gain	-10.00 to 10.00	1.00	0xF50B/0x050B
F5-18	Relay1outputdelay	0.0 to 3600.0s	0.0s	0xF512/0x0512
F5-20	DIO output delay	0.0 to 3600.0s	0.0s	0xF514/0x0514
F5-22	DO active mode selection 1	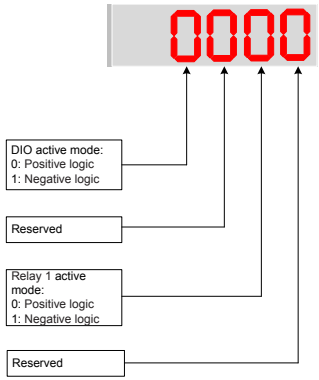	0000	0xF516/0x0516
Group F6: Start/Stop Control				
F6-00	Start mode	0: Direct start 1: Catching a spinning motor	0	0xF600/0x0600
F6-01	Mode of catching a spinning motor	0: From stop frequency 1: From 50 Hz 2: From max. frequency	0	0xF601/0x0601
F6-03	Start frequency	0.00 to10.00 Hz	0.00 Hz	0xF603/0x0603
F6-04	Start frequency holding time	0.0 to 100.0s	0.0s	0xF604/0x0604
F6-07	Acceleration/Deceleration mode	0: Linear acceleration/deceleration 1: Static S-curve acceleration/deceleration 2: Dynamic S-curve acceleration/deceleration	0	0xF607/0x0607
F6-08	Time proportion of S-curve start segment	0.0% to (100.0% –F6-09)	30.0%	0xF608/0x0608
F6-09	Time proportion of S-curve end segment	0.0% to (100.0% –F6-08)	30.0%	0xF609/0x0609

Para. No.	Para. Name	Setting Range	Default	Comms. Address
F6-10	Stop mode	0: Decelerate to stop 1: Coast to stop	0	0xF60A/0x060A
F6-11	DC injection braking 2 start frequency	0.00 Hz to maximum frequency	0.00 Hz	0xF60B/0x060B
F6-12	DC injection braking 2 delay time	0.0 to 100.0s	0.0s	0xF60C/0x060C
F6-13	DC injection braking 2 level	0% to 100%	50%	0xF60D/0x060D
F6-14	DC injection braking 2 active time	0.0 to 100.0s	0.0s	0xF60E/0x060E
F6-21	Demagnetization time	0.00s to 5.00s	0.5s	0xF615/0x0615
F6-22	Min. output frequency	0.00 Hz to F6-11	0.00 Hz	0xF616/0x0616
F6-23	Reserved by manufacturer	1 to 100	10	0xF617/0x0617
Group F7: Keypad Operation and LED Display				
F7-00	LED default display check	0: Disabled 1: Enabled	0	0xF700/0x0700
F7-01	MF.K key function selection	0: MF.K key disabled 1: Switchover from remote control (terminal or communication) to keypad control 2: Switchover between forward rotation and reverse rotation 3: Forward jog 4: Reverse jog 5: Parameter display mode switchover	0	0xF701/0x0701
F7-02	STOP/RESET key function	0: STOP/RESET key enabled only in keypad control 1: STOP/RESET key enabled in any operation mode	1	0xF702/0x0702
F7-03	LED display running parameters 1	0000 to FFFF 7 6 5 4 3 2 1 0 0: Running frequency (Hz) 1: Frequency reference (Hz) 2: Bus voltage (V) 3: Output voltage (V) 4: Output current (A) 5: Output power (kW) 6: Output torque (%) 7: DI state (V) 15 14 13 12 11 10 9 8 8: DO state 9: AI voltage (V) 10: Reserved 11: External operating panel potentiometer voltage (V) 12: Count value 13: Length value 14: Load speed display 15: PID reference	001F	0xF703/0x0703

Para. No.	Para. Name	Setting Range	Default	Comms. Address
F7-04	LED display running parameters 2	0000 to FFFF 7 6 5 4 3 2 1 0 PID feedback PLC stage Pulse reference (kHz) Feedback speed (Hz) Remaining running time (min) AI voltage before correction (V) External operating panel potentiometer voltage before correction (V) Reserved 15 14 13 12 11 10 9 8 Length value PLC stage Load speed PID reference Pulse reference (kHz) Reserved Reserved Reserved	0000	0xF704/0x0704
F7-05	LED display stop parameters	0000 to 1FFF 7 6 5 4 3 2 1 0 Frequency reference (Hz) Bus voltage (V) DI state DO state AI voltage (V) Reserved External operating panel potentiometer voltage (V) Count value 15 14 13 12 11 10 9 8 Length value PLC stage Load speed PID reference Pulse reference (kHz) Reserved Reserved Reserved	0033	0xF705/0x0705
F7-06	Load speed display coefficient	0.0001 to 65.000	1.0000	0xF706/0x0706
F7-07	Heatsink temperature of IGBT	0°C to 100°C	-	0xF707/0x0707
F7-08	Product series	100	-	0xF708/0x0708
F7-09	Accumulative running time	0 to 65535h	-	0xF709/0x0709
F7-10	Performance software version	-	-	0xF70A/0x070A
F7-11	Function software version	-	-	0xF70B/0x070B
F7-12	Number of decimal places for load speed display	10 to 23 00 Number of decimal places of U0-19/U0-29 1: 1 decimal place 2: 2 decimal places Number of decimal places of U0-14 0: 0 decimal place 1: 1 decimal place 2: 2 decimal places 3: 3 decimal places	21	0xF70C/0x070C
F7-13	Accumulative power-on time	0 to 65535 h	-	0xF70D/0x070D

Para. No.	Para. Name	Setting Range	Default	Comms. Address
F7-14	Accumulative power consumption	0 to 65535 kWh	-	0xF70E/0x070E
Group F8: Auxiliary Functions				
F8-00	Jog frequency reference	0.00 Hz to max. frequency	2.00 Hz	0xF800/0x0800
F8-01	Jog acceleration time	0.0 to 6500.0s	20.0s	0xF801/0x0801
F8-02	Jog deceleration time	0.0 to 6500.0s	20.0s	0xF802/0x0802
F8-03	Acceleration time 2	0.0 to 6500.0s	20.0s	0xF803/0x0803
F8-04	Deceleration time 2	0.0 to 6500.0s	20.0s	0xF804/0x0804
F8-07	Acceleration time 4	0.0 to 6500.0s	0.0s	0xF807/0x0807
F8-08	Deceleration time 4	0.0 to 6500.0s	0.0s	0xF808/0x0808
F8-12	Forward/Reverse run switchover dead-zone time	0.0 to 3000.0s	0.0s	0xF80C/0x080C
F8-13	Reverse RUN selection	0: Disabled 1: Enabled	0	0xF80D/0x080D
F8-14	Running mode when frequency reference lower than frequency lower limit	0: Run at frequency reference lower limit 1: Stop 2: Run at zero speed	0	0xF80E/0x080E
F8-16	Accumulative power-on time threshold	0 to 65000 h	0h	0xF810/0x0810
F8-17	Accumulative running time threshold	0 to 65000 h	0h	0xF811/0x0811
F8-18	Startup protection selection	0: Disabled 1: Enabled	0	0xF812/0x0812
F8-19	Frequency detection value 1	0.00 Hz to max. frequency	50.00 Hz	0xF813/0x0813
F8-20	Frequency detection hysteresis 1	0.0% to 100.0%	5.0%	0xF814/0x0814
F8-21	Detection width of target frequency reached	0.0% to 100.0%	0.0%	0xF815/0x0815
F8-25	Switchover frequency of accel. time 1 and accel. time 2	0.00 Hz to max. frequency	0.00 Hz	0xF819/0x0819
F8-26	Switchover frequency of decel. time 1 and decel. time 2	0.00 Hz to max. frequency	0.00 Hz	0xF81A/0x081A
F8-27	Set highest priority to terminal JOG function	0: Disabled 1: Enabled	0	0xF81B/0x081B
F8-30	Detection of frequency1	0.00 Hz to max. frequency	50.00 Hz	0xF81E/0x081E
F8-31	Detection width of frequency1	0.0% to 100.0% (max. frequency)	0.0%	0xF81F/0x081F
F8-34	Zero current detection level	0.0% to 300.0% (rated motor current)	5.0%	0xF822/0x0822
F8-35	Zero current detection delay	0.01s to 600.00s	0.10s	0xF823/0x0823
F8-36	Output overcurrent threshold	0.0% (no detection) 0.1% to 300.0% (rated motor current)	200.0%	0xF824/0x0824
F8-37	Output overcurrent detection delay	0.00s to 600.00s	0.00s	0xF825/0x0825
F8-38	Detection level of current1	0.0% to 300.0% (rated motor current)	100.0%	0xF826/0x0826
F8-39	Detection width of current1	0.0% to 300.0% (rated motor current)	0.0%	0xF827/0x0827
F8-42	Timing function	0: Disabled 1: Enabled	0	0xF82A/0x082A
F8-43	Running time setting channel	0: Set by F8-44 1: AI	0	0xF82B/0x082B

Para. No.	Para. Name	Setting Range	Default	Comms. Address
F8-44	Running time	0.0 to 6500.0 min	0.0 min	0xF82C/0x082C
F8-45	AI input voltage lower limit	0.00 V to F8-46	3.10 V	0xF82D/0x082D
F8-46	AI input voltage upper limit	F8-45 to 10.00 V	6.80 V	0xF82E/0x082E
F8-48	Cooling fan working mode	0: Working during drive running 1: Working continuously 2: Working when temperature reached	0	0xF830/0x0830
F8-49	Wakeup frequency	F8-51 to max. frequency (F0-10)	0.00 Hz	0xF831/0x0831
F8-50	Wakeup delay time	0.0 to 6500.0s	0.0s	0xF832/0x0832
F8-51	Hibernating frequency	0.00 Hz to wakeup frequency (F8-49)	0.00 Hz	0xF833/0x0833
F8-52	Hibernating delay time	0.0 to 6500.0 s	0.0s	0xF834/0x0834
F8-53	Running time threshold this time	0.0 to 6500.0 min	0.0 min	0xF835/0x0835
F8-54	Output power correction coefficient	0.0% to 200.0%	100.0%	0xF836/0x0836
F8-55	Emergency deceleration time	0.0 to 6500.0 s	10.0s	0xF837/0x0837
F8-57	Speed synchronous control selection	0: Disabled 1: Enabled	0	0xF839/0x0839
It selects whether to enable the speed synchronous control function. This function means direction data communication between two or more AC drives via CANlink, implementing target frequency of one or more slaves to be synchronized to that of the master. When this function is enabled, CANlink communication addresses of the master and slaves are matched automatically. The baud rate in speed synchronous control is set in Fd-00.				
F8-58	Master and slave selection in synchronous control	0: Master 1: Slave	0	0xF83A/0x083A
It is used to select whether the AC drive is master or slave. When the AC drive is slave, set F0-03 = 9 to set frequency reference via communication.				
Group F9: Fault and Protection				
F9-00	Motor overload protection	0: Disabled 1: Enabled	1	0xF900/0x0900
F9-01	Motor overload protection gain	0.20 to 10.00	1.0	0xF901/0x0901
F9-02	Motor overload pre-warning coefficient	50% to 100%	80%	0xF902/0x0902
F9-07	Detection of short-circuit to ground upon power-on	0: Disabled 1: Enabled	1	0xF907/0x0907
F9-08	Braking unit applied voltage	310.0 V to 800.0 V	Single phase: 378.0 V Three phase: 700.0 V	0xF908/0x0908
F9-09	Auto reset times	0 to 20	0	0xF909/0x0909
F9-10	Selection of DO action during auto reset	0: Not act 1: Act	0	0xF90A/0x090A
F9-11	Delay of auto reset	0.1 s to 100.0 s	1.0s	0xF90B/0x090B
F9-13	Output phase loss protection	0: Disabled 1: Enabled	1	0xF90D/0x090D

Para. No.	Para. Name	Setting Range	Default	Comms. Address
F9-14	1st fault type	0: No fault 1: Reserved 2: Overcurrent during acceleration 3: Overcurrent during deceleration 4: Overcurrent at constant speed 5: Overvoltage during acceleration 6: Overvoltage during deceleration 7: Overvoltage at constant speed 8: Pre-charge resistor overloaded 9: Undervoltage 10: AC drive overloaded 11: Motor overloaded 12: Input phase loss 13: Output phase loss 14: IGBT overheat 15: External fault 16: Communication abnormal 17: Reserved 18: Current detection abnormal 19: Motor auto-tuning abnormal 20: Reserved 21: Parameter read-write abnormal 22: Reserved 23: Motor short circuited to ground 24: Reserved 25: Reserved 26: Accumulative running time reached 29: Accumulative power-on time reached 30: Load lost 31: PID feedback lost during running 40: Overcurrent fast prevention timeout 41: Reserved 42: Excessive speed deviation 43: Reserved 45: Reserved 51: Reserved 55: Slave fault in speed synchronous	-	0xF90E/0x090E
F9-15	2nd fault type		-	0xF90F/0x090F
F9-16	3rd (latest) fault type		-	0xF910/0x0910
F9-17	Frequency upon 3rd fault	-	-	0xF911/0x0911
F9-18	Current upon 3rd fault	-	-	0xF912/0x0912
F9-19	Bus voltage upon 3rd fault	-	-	0xF913/0x0913
F9-20	DI state upon 3rd fault	-	-	0xF914/0x0914
F9-21	DO state upon 3rd fault	-	-	0xF915/0x0915
F9-22	AC drive state upon 3rd fault	-	-	0xF916/0x0916
F9-23	Power-on time upon 3rdfault	-	-	0xF917/0x0917
F9-24	Running time upon 3rd fault	-	-	0xF918/0x0918
F9-27	Frequency upon 2nd fault	-	-	0xF91B/0x081B
F9-28	Current upon 2nd fault	-	-	0xF91C/0x091C
F9-29	Bus voltage upon 2nd fault	-	-	0xF91D/0x091D
F9-30	DI state upon 2nd fault	-	-	0xF91E/0x091E
F9-31	DO state upon 2nd fault	-	-	0xF91F/0x091F

Para. No.	Para. Name	Setting Range	Default	Comms. Address
F9-32	AC drive state upon 2nd fault	-	-	0xF920/0x0920
F9-33	Power-on time upon 2nd fault	-	-	0xF921/0x0921
F9-34	Running time upon 2nd fault	-	-	0xF922/0x0922
F9-37	Frequency upon 1st fault	-	-	0xF925/0x0925
F9-38	Current upon 1st fault	-	-	0xF926/0x0926
F9-39	Bus voltage upon1st fault	-	-	0xF927/0x0927
F9-40	DI state upon 1st fault	-	-	0xF928/0x0928
F9-41	DO state upon 1st fault	-	-	0xF929/0x0929
F9-42	AC drive state upon 1st fault	-	-	0xF92A/0x092A
F9-43	Power-on time upon 1st fault	-	-	0xF92B/0x092B
F9-44	Running time upon 1st fault	-	-	0xF92C/0x092C
F9-47	Fault protection action selection 1	00000 to 22222	00000	0xF92F/0x092F
F9-48	Fault protection action selection 2	00000 to 11111	00000	0xF930/0x0930
F9-49	Fault protection action selection 3	00000 to 22222	00000	0xF931/0x0931
F9-54	Frequency selection for continuing to run upon fault	0: Current running frequency 1: Frequency reference 2: Frequency upper limit 3: Frequency lower limit 4: Backup frequency upon abnormality	0	0xF936/0x0936
F9-55	Backup frequency upon fault	0.0% to 100.0% (max. frequency)	100.0%	0xF937/0x0937
F9-59	Power dip ride-through function selection	0: Disabled 1: Bus voltage constant control 2: Decelerate to stop	0	0xF93B/0x093B
F9-60	Threshold of power dip ride-through function disabled	80% to F9-60	85%	0xF93C/0x093C
F9-61	Judging time of bus voltage recovering from power dip	0.0 to 100.0 s	0.5s	0xF93D/0x093D
F9-62	Threshold of power dip ride-through function enabled	60% to 100%	80%	0xF93E/0x093E
F9-63	Load lost protection	0: Disabled 1: Enabled	0	0xF93F/0x093F
F9-64	Load lost detection level	0.0% to 100.0%	10.0%	0xF940/0x0940
F9-65	Load lost detection time	0.0 to 60.0s	1.0s	0xF941/0x0941
F9-71	Power dip ride-through gain Kp	0 to 100	40	0xF947/0x0947
F9-72	Power dip ride-through integral coefficient	0 to 100	30	0xF948/0x0948
F9-73	Deceleration time of power dip ride-through	0.0 to 300.0s	20.0s	0xF949/0x0949
F9-74	Restart mode after fault reset	0: Normal 1: Catching a spinning motor	0	0xF94A/0x094A
Group FA: PID Function				
FA-00	PID reference setting channel	0: Set by FA-01 1: AI 2: External operating panel potentiometer 4: Pulse reference (DI4) 5: Via communication 6: Multi-reference	0	0xFA00/0x0A00

Para. No.	Para. Name	Setting Range	Default	Comms. Address
FA-01	PID digital setting	0.0% to 100.0%	50.0%	0xFA01/0x0A01
FA-02	PID feedback setting channel	0: AI 1: External operating panel potentiometer 3: Ai - external operating panel potentiometer 4: PULSE reference (DI4) 5: Via communication 6: AI + external operating panel potentiometer 7: Max. (|AI|, |external operating panel potentiometer|) 8: Min. (|AI1|, |external operating panel potentiometer|)	0	0xFA02/0x0A02
FA-03	PID operation direction	0: Forward 1: Reverse	0	0xFA03/0x0A03
FA-04	PID reference and feedback range	0 to 65535	1000	0xFA04/0x0A04
FA-05	ProportionalgainKp1	0.0 to 1000.0	20.0	0xFA05/0x0A05
FA-06	Integral timeTi1	0.01s to 10.00s	2.00s	0xFA06/0x0A06
FA-07	DifferentialtimeTd1	0.000s to 10.000s	0.000s	0xFA07/0x0A07
FA-08	PID output limit in reverse direction	0.00 Hz to max. frequency	0.00 Hz	0xFA08/0x0A08
FA-09	PID error limit	0.0% to 100.0%	0.0%	0xFA09/0x0A09
FA-10	PID differential limit	0.00% to 100.00%	0.10%	0xFA0A/0x0A0A
FA-11	PID reference change time	0.00s to 650.00s	0.00s	0xFA0B/0x0A0B
FA-12	PID feedback filter time	0.00s to 60.00s	0.00s	0xFA0C/0x0A0C
FA-13	PID output filter time	0.00s to 60.00s	0.00s	0xFA0D/0x0A0D
FA-15	Proportional gain Kp2	0.0 to 1000.0	20.0	0xFA0F/0x0A0F
FA-16	Integral time Ti2	0.01s to 10.00s	2.00s	0xFA10/0x0A10
FA-17	Differential time Td2	0.000s to 10.000s	0.000s	0xFA11/0x0A11
FA-18	PID parameter switchover condition	0: Not switched over 1: Switched over via DI 2: Switched over automatically according to error 3: Switched over automatically according to running frequency	0	0xFA12/0x0A12
FA-19	PID error 1 for auto switchover	0.0% to FA-20	20.0%	0xFA13/0x0A13
FA-20	PID error 2 for auto switchover	FA-19 to 100.0%	80.0%	0xFA14/0x0A14
FA-21	PID initial value	0.0% to 100.0%	0.0%	0xFA15/0x0A15
FA-22	PID initial value active time	0.00s to 650.00s	0.00s	0xFA16/0x0A16
FA-23	Max. value of two outputs error in forward direction	0.00% to 100.00%	1.00%	0xFA17/0x0A17
FA-24	Max. value of two outputs error in reverse direction	0.00% to 100.00%	1.00%	0xFA18/0x0A18

Para. No.	Para. Name	Setting Range	Default	Comms. Address
FA-25	PID integral property	00 to 11 00 Whether to stop integral operation when PID output reaches the limit 0: Continue integral operation 1: Stop integral operation Integral separation 0: Disabled 1: Enabled	00	0xFA19/0x0A19
FA-26	Detection level of PID feedback loss	0%: No detection 0.1% to 100.0%	0.0%	0xFA1A/0x0A1A
FA-27	Detection time of PID feedback loss	0.0 to 20.0s	0.0s	0xFA1B/0x0A1B
FA-28	Selection of PID operation at stop	0: Disabled 1: Enabled	0	0xFA1C/0x0A1C
Group Fb: Wobble Function, Fixed Length and Count				
Fb-00	Wobble setting mode	0: Relative to the frequency reference 1: Relative to the max. frequency	0	0xFB00/0x0B00
Fb-01	Wobble amplitude	0.0% to 100.0%	0.0%	0xFB01/0x0B01
Fb-02	Wobble step	0.0% to 50.0%	0.0%	0xFB02/0x0B02
Fb-03	Wobble cycle	0.1 to 3000.0s	10.0s	0xFB03/0x0B03
Fb-04	Triangular wave rising time coefficient	0.1% to 100.0%	50.0%	0xFB04/0x0B04
Fb-05	Set length	0 to 65535 m	1000 m	0xFB05/0x0B05
Fb-06	Actual length	0 to 65535 m	0 m	0xFB06/0x0B06
Fb-07	Number of pulses per meter	0.1 to 6553.5	100.0	0xFB07/0x0B07
Fb-08	Set count value	1 to 65535	1000	0xFB08/0x0B08
Group FC: Multi-Reference and Simple PLC Function				
FC-00	Reference0	-100.0% to 100.0%	0.0%	0xFC00/0x0C00
FC-01	Reference1	-100.0% to 100.0%	0.0%	0xFC01/0x0C01
FC-02	Reference2	-100.0% to 100.0%	0.0%	0xFC02/0x0C02
FC-03	Reference3	-100.0% to 100.0%	0.0%	0xFC03/0x0C03
FC-04	Reference4	-100.0% to 100.0%	0.0%	0xFC04/0x0C04
FC-05	Reference5	-100.0% to 100.0%	0.0%	0xFC05/0x0C05
FC-06	Reference6	-100.0% to 100.0%	0.0%	0xFC06/0x0C06
FC-07	Reference7	-100.0% to 100.0%	0.0%	0xFC07/0x0C07
FC-16	Simple PLC running mode	0: Stop after running one cycle 1: Keep final values after running one cycle 2: Repeat after running one cycle	0	0xFC10/0x0C10

Para. No.	Para. Name	Setting Range	Default	Comms. Address
FC-17	Simple PLC retentive selection	00 to 11 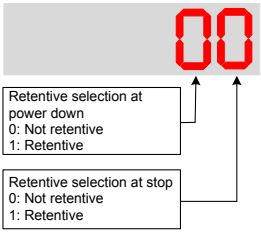 	00	0xFC11/0x0C11
FC-18	Running time of simple PLC reference 0	0.0s (h) to 6500.0s (h)	0.0s (h)	0xFC12/0x0C12
FC-19	Acceleration/deceleration time of simple PLC reference 0	0 to 1	0	0xFC13/0x0C13
FC-20	Running time of simple PLC reference1	0.0s (h) to 6500.0s (h)	0.0s (h)	0xFC14/0x0C14
FC-21	Acceleration/deceleration time of simple PLC reference 1	0 to 1	0	0xFC15/0x0C15
FC-22	Running time of simple PLC reference 2	0.0s (h) to 6500.0s (h)	0.0s (h)	0xFC16/0x0C16
FC-23	Acceleration/deceleration time of simple PLC reference 2	0 to 1	0	0xFC17/0x0C17
FC-24	Running time of simple PLC reference 3	0.0s (h) to 6500.0s (h)	0.0s (h)	0xFC18/0x0C18
FC-25	Acceleration/deceleration time of simple PLC reference 3	0 to 1	0	0xFC19/0x0C19
FC-26	Running time of simple PLC reference 4	0.0s (h) to 6500.0s (h)	0.0s (h)	0xFC1A/0x0C1A
FC-27	Acceleration/deceleration time of simple PLC reference 4	0 to 1	0	0xFC1B/0x0C1B
FC-28	Running time of simple PLC reference 5	0.0s (h) to 6500.0s (h)	0.0s (h)	0xFC1C/0x0C1C
FC-29	Acceleration/deceleration time of simple PLC reference 5	0 to1	0	0xFC1D/0x0C1D
FC-30	Running time of simple PLC reference 6	0.0s (h) to 6500.0s (h)	0.0s (h)	0xFC1E/0x0C1E
FC-31	Acceleration/deceleration time of simple PLC reference 6	0 to 1	0	0xFC1F/0x0C1F

Para. No.	Para. Name	Setting Range	Default	Comms. Address
FC-32	Running time of simple PLC reference 7	0.0s (h) to 6500.0s (h)	0.0s (h)	0xFC20/0x0C20
FC-33	Acceleration/deceleration time of simple PLC reference 7	0 to 1	0	0xFC21/0x0C21
FC-50	Time unit of simple PLC running	0: s 1: h	0	0xFC32/0x0C32
FC-51	Reference 0 source	0: Set by FC-00 1: AI 2: External operating panel potentiometer 4: PULSE reference 5: PID 6: Set by F0-08 and modified via UP/DOWN	0	0xFC33/0x0C33
Group Fd: Communication				
Fd-00	Baud rate	0000 to 5009 0000 CANlink baud rate: 0: 20 Kbps 1: 50 Kbps 2: 100 Kbps 3: 125 Kbps 4: 250 Kbps 5: 500 Kbps Reserved Reserved Modbus baud rate: 0: 300 bps 1: 600 bps 2: 1200 bps 3: 2400 bps 4: 4800 bps 5: 9600 bps 6: 19200 bps 7: 38400 bps 8: 57600 bps 9: 115200 bps	5005	0xFD00/0x0D00
Fd-01	Data format symbol	0: No check (8-N-2) 1: Even parity check (8-E-1) 2: Odd parity check (8-O-1) 3: No check (8-N-1) (Valid for Modbus)	0	0xFD01/0x0D01
Fd-02	Local address	0: Broadcast address 1 to 247	1	0xFD02/0x0D02
Fd-03	Response delay	0 to 20 ms	2	0xFD03/0x0D03
Fd-04	Communication timeout	0.0: invalid 0.1s to 60.0s	0.0s	0xFD04/0x0D04
Fd-05	Modbus protocol selection and PROFIBUS-DP data frame	0: Non-standard Modbus protocol 1: Standard Modbus protocol	1	0xFD05/0x0D05
Fd-06	Current resolution read by communication	0: 0.01 A 1: 0.1 A	0	0xFD06/0x0D06
Fd-07	PC software selection	0: Disabled 1: Enabled	1	0xFD07/0x0D07
Group FE: User-defined Parameters				

Para. No.	Para. Name	Setting Range	Default	Comms. Address
FE-00	User-defined parameter 0	F0.00 to FP.xx A0.00 to Ax.xx U0.00 to U0.xx	F0.00	0xFE00/0x0E00
FE-01	User-defined parameter 1		F0.00	0xFE01/0x0E01
FE-02	User-defined parameter 2		F0.00	0xFE02/0x0E02
FE-03	User-defined parameter 3		F0.00	0xFE03/0x0E03
FE-04	User-defined parameter 4		F0.00	0xFE04/0x0E04
FE-05	User-defined parameter 5		F0.00	0xFE05/0x0E05
FE-06	User-defined parameter 6		F0.00	0xFE06/0x0E06
FE-07	User-defined parameter 7		F0.00	0xFE07/0x0E07
FE-08	User-defined parameter 8		F0.00	0xFE08/0x0E08
FE-09	User-defined parameter 9		F0.00	0xFE09/0x0E09
FE-10	User-defined parameter 10		F0.00	0xFE0A/0x0E0A
FE-11	User-defined parameter 11		F0.00	0xFE0B/0x0E0B
FE-12	User-defined parameter 12		F0.00	0xFE0C/0x0E0C
FE-13	User-defined parameter 13		F0.00	0xFE0D/0x0E0D
FE-14	User-defined parameter 14		F0.00	0xFE0E/0x0E0E
FE-15	User-defined parameter 15		F0.00	0xFE0F/0x0E0F
FE-16	User-defined parameter 16		F0.00	0xFE10/0x0E10
FE-17	User-defined parameter 17		F0.00	0xFE11/0x0E11
FE-18	User-defined parameter 18		F0.00	0xFE12/0x0E12
FE-19	User-defined parameter 19		F0.00	0xFE13/0x0E13
FE-20	User-defined parameter 20		F0.00	0xFE14/0x0E14
FE-21	User-defined parameter 21		F0.00	0xFE15/0x0E15
FE-22	User-defined parameter 22		F0.00	0xFE16/0x0E16
FE-23	User-defined parameter 23		F0.00	0xFE17/0x0E17
FE-24	User-defined parameter 24		F0.00	0xFE18/0x0E18
FE-25	User-defined parameter 25		F0.00	0xFE19/0x0E19
FE-26	User-defined parameter 26		F0.00	0xFE1A/0x0E1A
FE-27	User-defined parameter 27		F0.00	0xFE1B/0x0E1B
FE-28	User-defined parameter 28		F0.00	0xFE1C/0x0E1C
FE-29	User-defined parameter 29		F0.00	0xFE1D/0x0E1D
FE-30	User-defined parameter 30		F0.00	0xFE1E/0x0E1E
FE-31	User-defined parameter 31		F0.00	0xFE1F/0x0E1F
Group FP: Function Parameter Management				
FP-00	User password	0 to 65535	0	0x1F00
FP-01	Industry macro	0: No operation 01: Restore factory parameters except motor parameters 02: Clear records 03: Reserved 04: Back up current user parameters 05 to 19: Reserved 20: Mechanical movement industry (conveying belt) 21: Inertia industry (fan) 22 to 500: Reserved 501: Restore user backup parameters	0	0x1F01

Para. No.	Para. Name	Setting Range	Default	Comms. Address
FP-02	Parameter display property	00 to 11 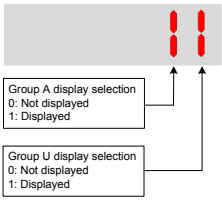 	11	0x1F02
FP-04	Parameter modification property	0: Modifiable 1: Unmodifiable	0	0x1F04
Group A1: Virtual DI/DO				
A1-00	VDI1 function selection	0 to 59	0	0xA100/0x4100
A1-01	VDI2 function selection	0 to 59	0	0xA101/0x4101
A1-02	VDI3 function selection	0 to 59	0	0xA102/0x4102
A1-03	VDI4 function selection	0 to 59	0	0xA103/0x4103
A1-04	VDI5 function selection	0 to 59	0	0xA104/0x4104
A1-05	VDI active state setting mode	00000 to 11111 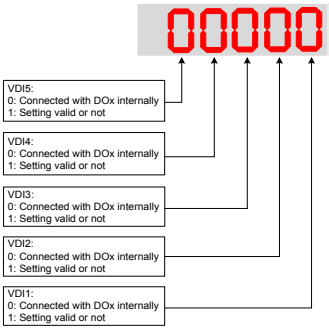 	00000	0xA105/0x4105
A1-06	Selection of VDI active state	00000 to 11111 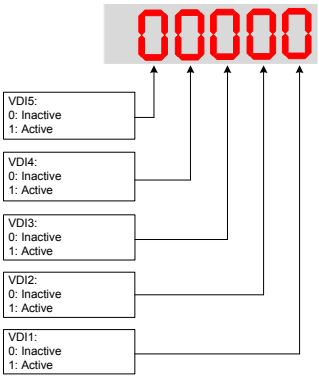 	00000	0xA106/0x4106

Para. No.	Para. Name	Setting Range	Default	Comms. Address
A1-07	Function selection for AI used as DI	Same as F4-00	0	0xA107/0x4107
A1-10	Active state selection for AI used as DI	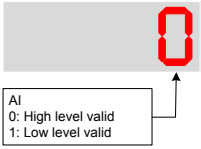	0	0xA10A/0x410A
A1-11	VDO1 function selection	0: Connected with DIx internally 1 to 41: same as F5-04	0	0xA10B/0x410B
A1-12	VDO2 function selection	0: Connected with DIx internally 1 to 41: same as F5-04	0	0xA10C/0x410C
A1-13	VDO3 function selection	0: Connected with DIx internally 1 to 41: same as F5-04	0	0xA10D/0x410D
A1-14	VDO4 function selection	0: Connected with DIx internally 1 to 41: same as F5-04	0	0xA10E/0x410E
A1-15	VDO5 function selection	0: Connected with DIx internally 1 to 41: same as F5-04	0	0xA10F/0x410F
A1-16	VDO1 output delay	0.0 to 3600.0s	0.0s	0xA110/0x4110
A1-17	VDO2 output delay	0.0 to 3600.0s	0.0s	0xA111/0x4111
A1-18	VDO3 output delay	0.0 to 3600.0s	0.0s	0xA112/0x4112
A1-19	VDO4 output delay	0.0 to 3600.0s	0.0s	0xA113/0x4113
A1-20	VDO5 output delay	0.0 to 3600.0s	0.0s	0xA114/0x4114
A1-21	VDO active mode selection	00000 to 11111 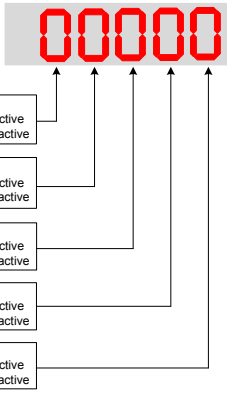	00000	0xA115/0x4115
Group A5: Control Optimization				
A5-00	DPWM switchover frequency upper limit	0.00 Hz to max. frequency	12.00 Hz	0xA500/0x4500
A5-02	Dead zone compensation mode selection	0: No compensation 1: Compensation mode 1	1	0xA502/0x4502
A5-03	Random PWM depth	0: Random PWM invalid 1 to 10: PWM carrier frequency random depth	3	0xA503/0x4503
A5-04	Overcurrent fast prevention	0: Disabled 1: Enabled	1	0xA504/0x4504

Para. No.	Para. Name	Setting Range	Default	Comms. Address
A5-05	Max. output voltage coefficient	100% to 110%	103%	0xA505/0x4505
A5-06	Undervoltage threshold	140.0 to 420.0 V	Single phase: 200.0 V Three phase: 350.0 V	0xA600/0x4600
A5-08	Low speed carrier frequency upper limit	0.0 to 6.0 kHz	0.0	0xA508/0x4508
A5-09	Overvoltage threshold	200.0 to 820.0 V	Single phase: 410.0 V Three phase: 820.0 V	0xA509/0x4509
Group A6: AI Curve Setting				
A6-24	Jump point of AI1 input corresponding setting	-100.0% to 100.0%	0.0%	0xA618/0x4618
A6-25	Jump amplitude of AI1 input corresponding setting	0.0% to 100.0%	0.5%	0xA619/0x4619
A6-26	Jump point of AI2 input corresponding setting	-100.0% to 100.0%	0.0%	0xA61A/0x461A
A6-27	Jump amplitude of AI2 input corresponding setting	0.0% to 100.0%	0.5%	0xA61B/0x461B
Group AA: FVC/SVC Extension Parameters				
AA-05	SVC speed filter	5 to 32 ms	15 ms	0xAA05/0x4A05
AA-06	SVC speed feedback method	0 to 3	0	0xAA06/0x4A06
AA-07	SVC magnetic field adjustment bandwidth	0.5 to 8.0 Hz	4.0 Hz	0xAA07/0x4A07
AA-08	SVC magnetic field open loop control low speed current	30% to 150%	100	0xAA08/0x4A08
AA-09	Open loop control switchover frequency	2.0 to 100.0 Hz	4.0 Hz	0xAA07/0x4A07
AA-10	Open loop control deceleration speed fluctuation coefficient	0 to 6	3	0xAA0A/0x4A0A
AA-11	Open loop control acceleration/ deceleration time	0.1 to 1000.0s	50.0s	0xAA0B/0x4A0B
AA-12	Resistance identification upon startup	0: Disabled 1: Enabled	0	0xAA0C/0x4A0C
AA-13	Stator resistance coefficient 1 identification before startup	0 to 65535	Auto-tuning parameter	0xAA0D/0x4A0D
AA-14	Stator resistance coefficient 2 identification before startup	0 to 65535	Auto-tuning parameter	0xAA0E/0x4A0E
AA-15	Stator resistance coefficient 3 identification before startup	0 to 65535	Auto-tuning parameter	0xAA0F/0x4A0F
Group AC: AI/AO Correction				
AC-00	AI measured voltage 1	-10.00 to 10.000 V	350.0 V	0xAC00/0x4C00
AC-01	AI displayed voltage 1	-10.00 to 10.000 V	Factory-corrected	0xAC01/0x4C01
AC-02	AI measured voltage 2	-10.00 to 10.000 V	Factory-corrected	0xAC02/0x4C02
AC-03	AI displayed voltage 2	-10.00 to 10.000 V	Factory-corrected	0xAC03/0x4C03

Para. No.	Para. Name	Setting Range	Default	Comms. Address
AC-12	AO target voltage 1	-10.00 to 10.000 V	Factory-corrected	0xAC0C/0x4C0C
AC-13	AO measured voltage 1	-10.00 to 10.000 V	Factory-corrected	0xAC0D/0x4C0D
AC-14	AO target voltage 2	-10.00 to 10.000 V	Factory-corrected	0xAC0E/0x4C0E
AC-15	AO measured voltage 2	-10.00 to 10.000 V	Factory-corrected	0xAC0F/0x4C0F
Note: Parameters in groups A1 and A5 are not displayed by default. They can be displayed by setting FP-02.				
Group AE: AI/AO Manufacturer Correction Value				
AE-00	AI1 measured voltage 1	-9.999 to 4.000 V	2.000 V	0xAE00/0x4E00
AE-01	AI1 sampled voltage 1	-9.999 to 4.000 V	2.000 V	0xAE01/0x4E01
AE-02	AI1 measured voltage 2	-9.999 to 9.999 V	8.000 V	0xAE02/0x4E02
AE-03	AI1 sampled voltage 2	-9.999 to 9.999 V	8.000 V	0xAE03/0x4E03
AE-12	AO1 ideal voltage 1	0.500 to 4.000 V	2.000 V	0xAE0C/0x4E0C
AE-13	AO1 measured voltage 1	0.500 to 4.000 V	2.000 V	0xAE0D/0x4E0D
AE-14	AO1 ideal voltage 2	6.000 to 9.999 V	8.000 V	0xAE0E/0x4E0E
AE-15	AO1 measured voltage 2	6.000 to 9.999 V	8.000 V	0xAE0E/0x4E0E

5.3 Monitoring Parameter

Para. No	Para. Name	Comms. Address
Group U0: Monitoring Parameters		
U0-00	Running frequency	0x7000
U0-01	Frequency reference	0x7001
U0-02	Bus voltage	0x7002
U0-03	Output voltage	0x7003
U0-04	Output current	0x7004
U0-05	Output power	0x7005
U0-06	Output torque	0x7006
U0-07	DI state	0x7007
U0-08	DO state	0x7008
U0-09	AI voltage	0x7009
U0-10	Communication protocol	0x700A
U0-11	External operating panel potentiometer voltage	0x700B
U0-12	Count value	0x700C
U0-13	Length value	0x700D
U0-14	Load speed display	0x700E
U0-15	PID reference	0x700F
U0-16	PID feedback	0x7010
U0-17	PLC stage	0x7011
U0-18	Pulse reference	0x7012
U0-19	Feedback speed	0x7013
U0-20	Remaining running time	0x7014
U0-21	AI voltage before correction	0x7015

Para. No	Para. Name	Comms. Address
Group U0: Monitoring Parameters		
U0-22	External operating panel potentiometer voltage	0x7016
U0-24	Motor speed	0x7018
U0-25	Accumulative power-on time	0x7019
U0-26	Accumulative running time	0x701A
U0-27	Pulse reference	0x701B
U0-28	Communication reference	0x701C
U0-30	Main frequency reference	0x701E
U0-31	Auxiliary frequency reference	0x701F
U0-32	Viewing any register address value	0x7020
U0-35	Target torque	0x7023
U0-37	Power factor angle	0x7025
U0-39	Target voltage upon V/F separation	0x7027
U0-40	Output voltage upon V/F separation	0x7028
U0-41	DI state display	0x7029
U0-42	DO state display	0x702A
U0-45	Fault information	0x702D
U0-59	Reserved	0x703B
U0-60	Reserved	0x703C
U0-61	AC drive state	0x703D
U0-62	Current fault code	0x703E
U0-63	Reserved	0x703F
U0-64	Number of slaves	0x7040
U0-65	Torque upper limit	0x7041
U0-69	Speed of transmitting DP	0x7045
U0-71	Communication card current display	0X7047
U0-78	Linear speed	0X704E

6 Troubleshooting

6.1 AC Drive Performance Fine Tuning

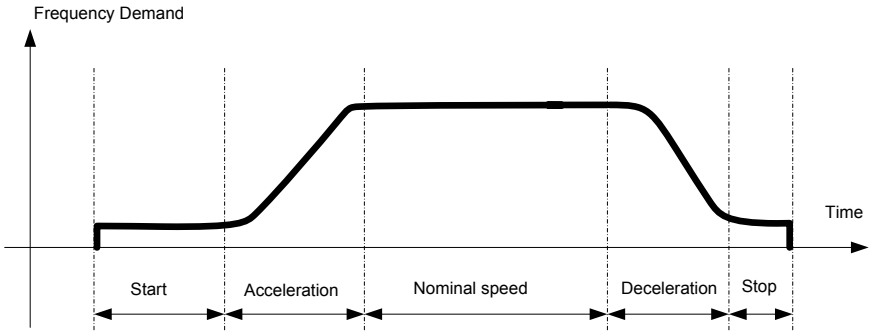

Stage	Symptom	Diagnostics	Remedies
Start	Rollback	Start frequency is too low	Increase F6-03, ranging 0 to10 Hz
		Torque output is insufficient	Make sure F3-00 = 0, F3-01 = 0
	Starting jerk	Start frequency is too high	Decrease F6-03, ranging 0 to 10 Hz
Acceleration	Jerk when acceleration starts	Too fast acceleration at this section	Increase F6-08, ranging 0 to (100-(F6-09))% Or increase F0-17, ranging 0 to 6500s
	Jerk when acceleration end	Too fast acceleration at this section	Increase F6-09, ranging 0 to (100-(F6-08))% Or increase F0-17, ranging 0 to 6500s
	Vibration	Overcurrent stall prevention occurs	It reaches current limit
Nominal speed	Vibration	Too big current loop PI gains	Double check the motor parameters and then perform motor auto-tuning once more
Deceleration	Vibration	Overcurrent stall prevention occurs	it reaches current limit
Stop	Jerk	Too strong DC injection at stop	Decrease F6-13, ranging 0 to 100%
	Slip	Too short DC injection active time at stop	Increase F6-14,ranging 0 to 100s
		Too weak DC injection at stop	Increase F6-13, ranging 0 to 100%
		Braking device applies too late	check the timing of braking device

6.2 Fault Codes and Troubleshooting

Display	Fault Name	Possible Causes	Solutions
Er-02	Overcurrent during acceleration	Ground fault or short circuit exists in the output circuit.	Check whether short-circuit occurs on the motor, the motor cable or contactor.
		Acceleration time is too short.	Increase acceleration time.
		Customized torque boost or V/F curve is not appropriate.	Adjust the customized torque boost or V/F curve.
		The voltage is too low.	Adjust the voltage to normal range.
		The spinning motor is started.	Enable the catching a spinning motor function or start the motor after it stops.
		A load is added suddenly during acceleration.	Cancel the suddenly added load.
		The AC drive power class is small.	Replace a drive of larger power class.
		The braking resistor resistance is small. The braking resistor is short circuited.	Replace a new braking resistor.
Er-03	Overcurrent during deceleration	Ground fault or short circuit exists in the output circuit.	Check whether short-circuit occurs on motor, motor cable or contactor.
		Acceleration time is too short.	Increase acceleration time.
		The voltage is too low.	Adjust the voltage to normal range.
		A load is added suddenly during deceleration.	Cancel the suddenly added load.
		Braking unit and braking resistor are not installed.	Install braking unit and braking resistor.
		The braking resistor resistance is small. The braking resistor is short circuited.	Replace a new braking resistor.
Er-04	Overcurrent at constant speed	Ground fault or short circuit exists in the output circuit.	Check whether short-circuit occurs on the motor, motor cable or contactor.
		The voltage is too low.	Adjust the voltage to normal range.
		A load is added suddenly during running.	Cancel the suddenly added load.
		The AC drive power class is small.	Replace a drive of larger power class.
		The braking resistor resistance is small. The braking resistor is short circuited.	Replace a new braking resistor.
Er-05	Overvoltage during acceleration	Input voltage is too high.	Adjust input voltage to normal range.
		An external force drives motor during acceleration.	Cancel the external force.
		Braking unit and braking resistor are not installed.	Install braking unit and braking resistor.
		Acceleration time is too short.	Increase acceleration time.
Er-06	Overvoltage during deceleration	Input voltage is too high.	Adjust input voltage to normal range.
		An external force drives motor during deceleration.	Cancel the external force or install braking resistor.
		Deceleration time is too short.	Increase deceleration time.
		Braking unit and braking resistor are not installed.	Install braking unit and braking resistor.
Er-07	Overvoltage at constant speed	Input voltage is too high.	Adjust input voltage to normal range.
		An external force drives motor during running.	Cancel the external force or install a braking resistor
Er-08	Control power fault	Input voltage is not within the permissible range.	Adjust the input voltage in the permissible range.

Display	Fault Name	Possible Causes	Solutions
Er-09	Undervoltage	Instantaneous power failure occurs	Reset the fault.
		The AC drive's input voltage is not within the permissible range.	Adjust the voltage to normal range.
		The bus voltage is abnormal.	Replace the AC drive.
		The rectifier bridge, the pre-charge resistor, the drive board or the control board are abnormal.	Replace the AC drive.
Er-10	Drive overload	Load is too heavy or locked-rotor occurs on motor.	Reduce load or check motor and mechanical conditions.
		The AC drive power class is small.	Replace a drive of larger power class.
Er-11	Motor overload	F9-01 (Motor overload protection gain) is set improperly.	Set F9-01 correctly.
		Load is too heavy or locked-rotor occurs on motor.	Reduce load or check motor and mechanical conditions.
		The AC drive power class is small.	Replace a drive of larger power class.
Er-12	Input pahse loss	Three phase input is abnormal.	Eliminate faults in external circuitry.
		Drive board is abnormal.	
		Lightning protection board is abnormal.	Contact the agent or Lensail.
		Control board is abnormal.	
Er-13	Output phase loss	Motor winding is damaged.	Check resistance between motor cables. Replace motor is winding is damaged.
		The cable connecting the AC drive and the motor is abnormal.	Check for wiring errors and ensure the output cable is connected properly.
		The AC drive's three-phase outputs are unbalanced when the motor is running.	Check whether the motor three-phase winding is normal.
		The drive board or the IGBT is abnormal.	Replace the AC drive.
Er-14	IGBT overheat	The ambient temperature is too high.	Lower the ambient temperature.
		The ventilation is clogged.	Clean the ventilation.
		The fan is damaged.	Replace the cooling fan.
		Thermally sensitive resistor of IGBT is damaged.	Replace the AC drive.
		The AC drive IGBT is damaged.	Replace the AC drive.
Er-15	External equipment fault	External fault signal is input via DI.	Confirm that the mechanical condition allows restart (F8-18) and reset the operation.
		External fault signal is input via virtual I/O.	Confirm that the virtual I/O parameters in group A1 are set correctly and reset the operation.
Er-16	Communication fault	Host computer is in abnormal state.	Check the cable of host computer.
		Communication cable is abnormal.	Check the communication cables.
		Communication parameters in group Fd are set improperly.	Set communication parameters in group Fd properly.
		After all the preceding checkings are done but the fault still exists, restore the default settings.	
Er-18	Current detection fault	The drive board is abnormal.	Replace the AC drive.
Er-21	EEPROM read-write fault	EEPROM chip is damaged	Replace the AC drive.
Er-23	Short circuit to ground	Motor is short circuited to the ground.	Replace cable or motor.
		Top tube of the AC drive is damaged. Ask professional to check.	Replace the AC drive.

Display	Fault Name	Possible Causes	Solutions
Er-26	Accumulative running time reached	Accumulative running time reaches the setting value.	Clear the record through parameter initialization.
Er-27	User-defined fault 1	User-defined fault 1 is input via DI.	Reset the operation.
		User-defined fault 1 is input via virtual I/O.	
Er-28	User-defined fault 2	User-defined fault 2 is input via DI.	Reset the operation.
		User-defined fault 2 is input via virtual I/O.	
Er-29	Accumulative power-on time reached	Accumulative power-on time reaches the setting value.	Clear the record through parameter initialization.
Er-30	Off load fault	The output current of AC drive is smaller than F9-64 (load loss detection level).	Check whether load is disconnected or the setting of F9-64 and F9-65 (load lost detection time) satisfies actual running condition.
Er-31	PID feedback lost during running	PID feedback is smaller than the setting value of FA-26 (detection level of PID feedback loss).	Check PID feedback or set FA-26 properly.
Er-40	Quick current limit	Load is too heavy or locked-rotor occurs on motor.	Reduce load or check motor and mechanical conditions.
		The AC drive power class is small.	Replace a drive of larger power class.
Er-55	Slave faulty in speed synchronous	When speed synchronous is enabled, the master receives CAN communication data but does not detect the salve. Then Err55 is reported.	1. Check the slave CAN communication cable connection. 2. Check whether CAN communication of the slave is normal.

6.3 Symptoms and Diagnostics

Fault Name	Possible Causes	Solutions
There is no display at power-on.	The mains voltage is not input or too low.	Check the power supply.
	The AC Drive is damaged.	Replace the AC drive.
LSH is displayed at power-on.	Cable between drive board and control board is in poor contact.	Re-connect the 4-pin cable and 28-pin cable.
	Control board is damaged	Replace the AC drive.
	The motor or motor cable is short circuited to ground.	Check whether short-circuit occurs on motor, motor cable or contactor.
	The mains voltage is too low.	Check the power supply.
	The mains voltage is too low.	
Er-14 (IGBT overheat) is detected frequently.	The setting of carrier frequency is too high.	Reduce carrier frequency (F0-15).
	The cooling fan is damaged, or ventilation is clogged.	Replace the fan or clean the ventilation.
	Components inside the AC drive are damaged (thermistor or others).	Replace the AC drive.
The motor does not rotate after the AC drive runs.	It is motor or motor cable problem.	Check that wiring between AC drive and motor is normal.
	Related AC drive and motor parameters are set improperly.	Restore the factory parameters and re-set the motor parameters properly.
	The drive board is faulty.	Replace the AC drive.
The DI terminals are disabled.	Related parameters are set incorrectly.	Check and set parameters in group F4 again.
	External signals are incorrect.	Re-connect external signal cables.
	The control board is damaged.	Replace the AC drive.

Fault Name	Possible Causes	Solutions
The AC drive detects overcurrent and overvoltage frequently.	Motor parameters are set improperly.	Set motor parameters or perform motor auto-tuning again.
	Acceleration/deceleration time is improper.	Set proper acceleration/deceleration time.
	Load fluctuates.	Contact the agent or Lensail.

Revision History

Date	Version	Change Description
May 2019	V0.0	First release

Shenzhen Lensail Technology Co., Ltd.
Add.:603A, 6th Floor, Building 3, C0FC0 Business Park, Xin'an Street, Bao'an District, Shenzhen, P.R. China
Tel: +86-755-8667 7286
Fax: +86-755-8621 9066
https: //www.lensail.com

Factory Add.: 3rd Floor, Building C, Xixiang Haoye Industrial Park, No.162 Fengtang Avenue,
Fuhai Street, Baoan District, Shenzhen, P.R. China
Tel: +86-755-8667 7286
Fax: +86-755-8621 9066
https: //www.lensail.com

190531009

Copyright Shenzhen Lensail Technology Co., Ltd.